DAIHATSU

F300

HARNESS & WIRING DIAGRAM

GENERAL HANDLING INSTRUCTIONS ..... HW– 2
FUSE BLOCK ..... HW– 6
FUSIBLE LINK BLOCK ..... HW– 7
FUSE CIRCUIT ..... HW– 8
WIRING HARNESSES HW–14
WIRING CLAMPING HW–43

WFE90-HW001

GENERAL HANDLING INSTRUCTIONS

HANDLING AND INSPECTION

Removal

To disconnect the connector, simply pull out the connector while the lock lever is being pressed down, as indicated in the right figure.

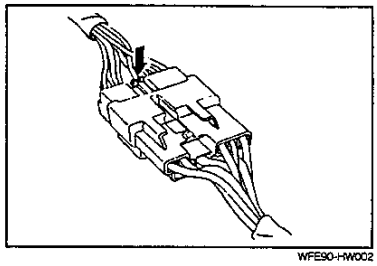

WFE90-HW002

Inspection

When you conduct continuity checks or voltage checks using a circuit tester, if you insert a test probe from the connector side, it is impossible to get an adequate fitting. Hence, be sure to positively insert the test probe from the harness side, as indicated in the right figure.

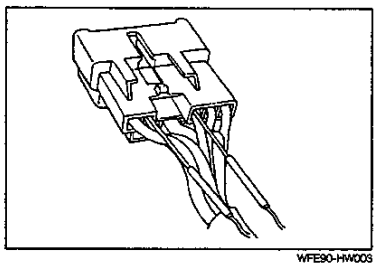

WFE90-HW003

REPLACEMENT

Removal

(1) From the aperture, insert a miniature type common screwdriver into between the locking lug and the terminal.

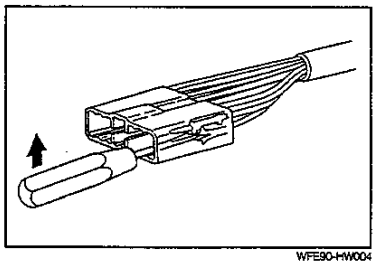

WFE90-HW004

(2) While the locking lug is being pried upward by means of a screwdriver, pull out the terminal from the backside.

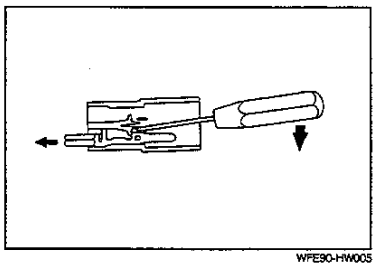

WFE90-HW005

Installation

(1) Insert the terminal, until the locking lug is locked positively.
(2) Ensure that the locking lug is locked positively by raising the wire.

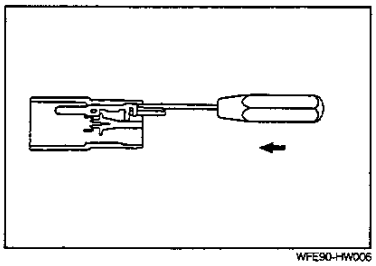

WFE90-HW006

INSPECTION

Tester (Volt/ohmmeter)

For the inspection, use a tester having an internal resistance of more than 10 kΩ/V.
Use of a tester with a low internal resistance may cause wrong measurement or secondary troubles.

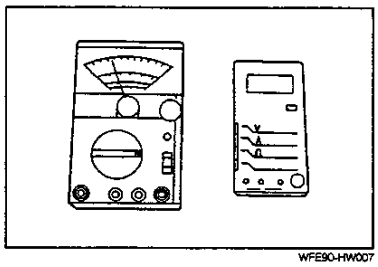

WFE90-HW007

Conventional type connector

When resistance measurement and/or voltage measurement is conducted at the connector section, insert the measuring probe from the back of the connector, being very careful not to damage the harness-to-terminal connections.

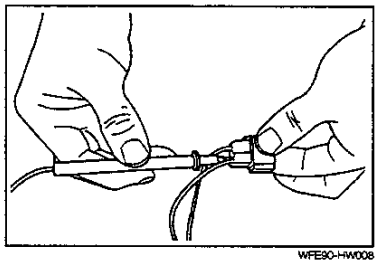

WFE90-HW008

Water-proof type connector

When resistance measurement and/or voltage measurement is conducted at the connector section, bring the measuring probe into contact with the terminal at the connection side of the connector.
Be very careful not to apply excessive force to the terminal at the connector side. Failure to observe this caution may deform the terminal, causing poor continuity.
As an alternative method, insert a male or female terminal into the connector terminal or connect an adequate attachment. Then, connect the measuring probe.

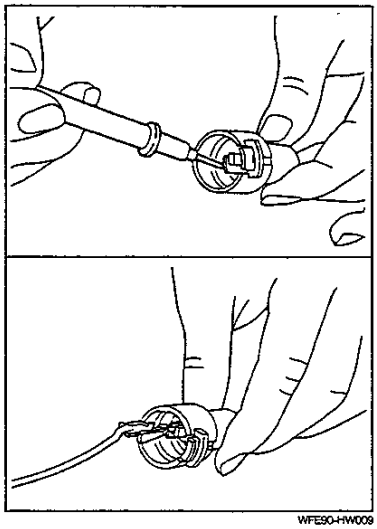

WFE90-HW009

CONNECTION

Perform the connection, until the lock is completely engaged.

NOTE:

- To confirm whether the lock type connector has been locked or not, lightly pull the connector. Make sure that the connector will not be disconnected.
- Be sure to press the connector again before finishing the confirmation.

WFE90-HW010

OPERATION OF WIRE HARNESS

1. General Instructions

(1) Never pull the connectors or step on them during the wire harness transport or assembly.
(Prevention of pulling-out of terminals, connector cracks, deformation and so forth)

(2) Care must be exercised to ensure that no scratch is made to the wire harness by burrs or edges during the wire harness transport or assembly.
(Prevention of scratches to the outer trim, electrical insulators and so forth)

(3) Clamping method
In the case of resin clamps, ensure that the clamp section is fitted in the body hole.

NOTE:

- **Ensure that the clamp will not be detached when it is pulled lightly in the arrow-headed direction.**
(Prevention of interference due to the detachment of the clamp)

WFE90-HW011

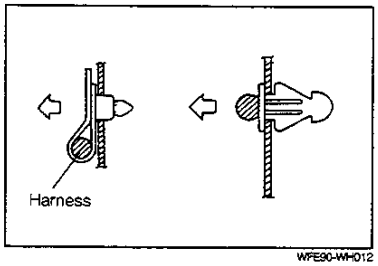

WFE90-HW012

- In the case of metal sheet welded clamps, be sure to assemble the harness in such a way that the harness will not come in contact with the welded surface.
(Prevention of wire harness damage due to welding burrs)

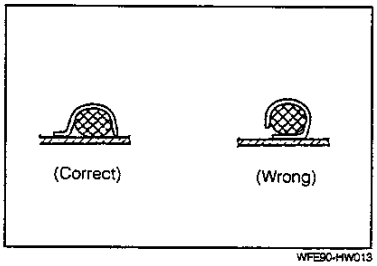

WFE90-HW013

- In case that the locating guide of the clamp position or the clamp mark is clamped, make sure that the clamp is located within the guide. As for the clamp at the clamp mark section, ensure that the clamping is made at a point within ±10 mm (0.39 inch).

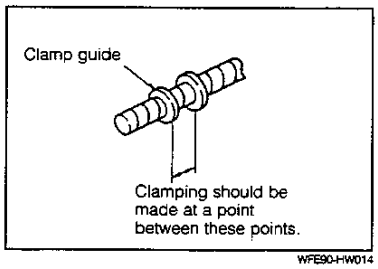

WFE90-HW014

(Prevention of slackness or interference)

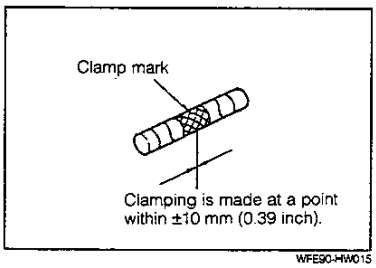

WFE90-HW015

(4) Terminals and connectors

- Perform the connection of connectors positively.
  - Connector with lock ..... Ensure that the locking is made.
  - Connector without lock ..... Connect the connector positively until it stops.

WFE90-

- Retention by screws
  - When the tightening torque is specified, be sure to observe the specification strictly. (The tightening torque is posted in the table separately.)
  - Ensure that the staked section may not come on the assembling surface.
  - After completion of the tightening operation, lightly pull out the terminal. Ensure that there is no slackness.

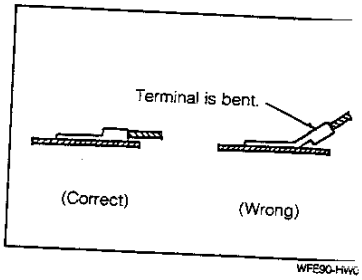

WFE90-HW0

- When performing other operations, care must be exercised to ensure that no connected connector is detached by pulling out the wire harness forcibly.

WFE90-HW0

2. Work Procedure for Tightening-up Type Resin Clamps

<Work procedure>

When the tightening-up type resin clamps are employed, do not use any pliers, cutting pliers or the like.

<Reason>

Prevention of clamps being cut or scratched

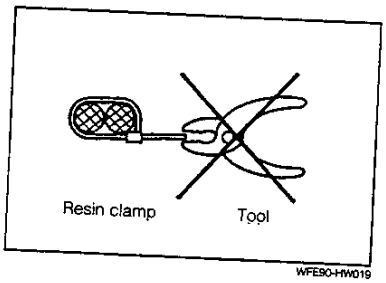

WFE90-HW019

WIRING HARNESSES

WARNING:

- **The wire diameter and capacity of each harness have been determined to assure the normal operation of the electrical system.**
- **Hence, do not take power for accessories carelessly through the original wiring harness. Failure to observe this caution may cause system malfunction or fire.**

WFE90-HW020

Wiring Color Code

- For identification purpose, each wire has its own color. Each color bears a code as described in the right table. These codes are used in the wiring diagram and will be helpful during trouble shooting.

Code	Gr	Br	B
Color	Gray	Brown	Black
Code	W	R	G
Color	White	Red	Green
Code	Y	L	O
Color	Yellow	Blue	Orange
Code	P	Lg	V
Color	Pink	Light green	Violet

WFE90-HW021

- The wire color comes in two kinds: single color and composite color. In the case of single color, the whole outer coat of the harness is of a single color.
  In the case of composite color, a fine line of the second color is drawn on the harness basic color.
  In this case, the code is composed of the basic color code which comes first and the second color code which comes after a hyphen.

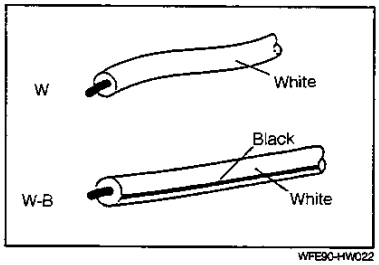

WFE90-HW022

FUSE BLOCK

Installing position

The fuse block is located at the left side of the steering wheel.

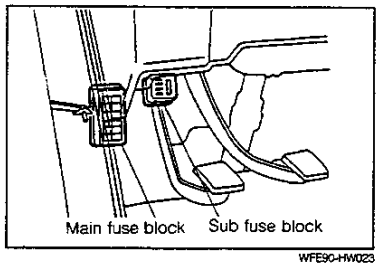

WFE90-HW023

REPLACEMENT OF FUSES & FUSIBLE LINK

PRECAUTION

The fuse replacement must be made at all times by using a new fuse with the correct amperage.

NOTE:

(1) Before any fuse is replaced, be certain to turn OFF all electrical equipment and ignition switch. Never use any fuse in excess of the designated rating.

(2) Be sure to employ a puller for removing/installing fuses. Also, the removal/installation of fuses must be performed straight.
If the fuse is removed or installed in a twisted condition, the terminal will be expanded unduly, resulting in poor contact.

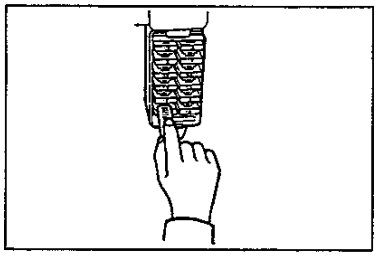

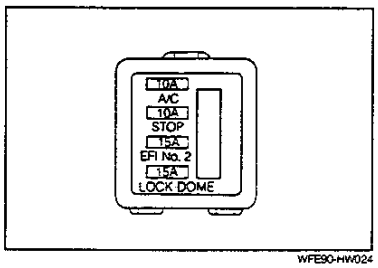

WFE90-HW024

If any fuse is blown out repeatedly, the likelihood is that there exists a short in the relevant system. Hence, perform checks for possible systems, referring to Page and Section under "Wiring Diagram."

FUSIBLE LINK BLOCK

If the fusible link is blown out repeatedly, the likelihood is that there exists a short in the relevant system. Hence, perform checks for possible systems, referring to the wiring diagram.

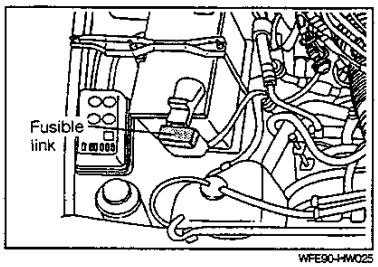

WFE90-HW025

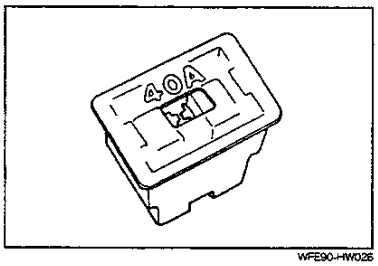

WFE90-HW026

Replacement

1. If visual inspection reveals that the fusible link is blown out, replace it with a new fusible link with the designated rating.
   NOTE:
   1. Before the fusible link is replaced, be sure to turn OFF the ignition key.
   2. Care must be exercised to ensure that the fusible link is not twisted during the removal/installation. If the fusible link is replaced forcibly, it will cause breakage or poor contact.

FUSE CIRCUIT (HD-C engine)

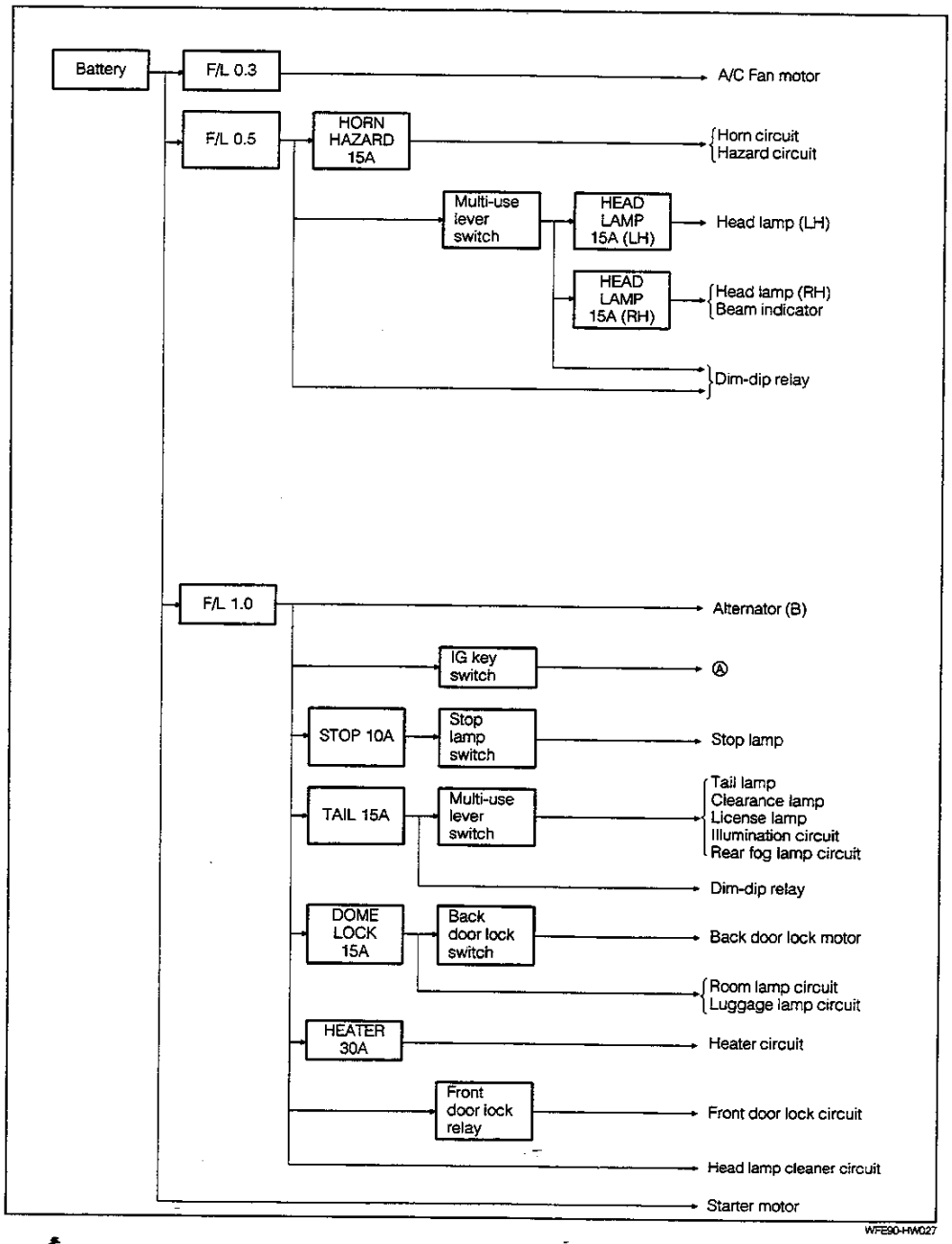

FUSE CIRCUIT (HD-E engine)

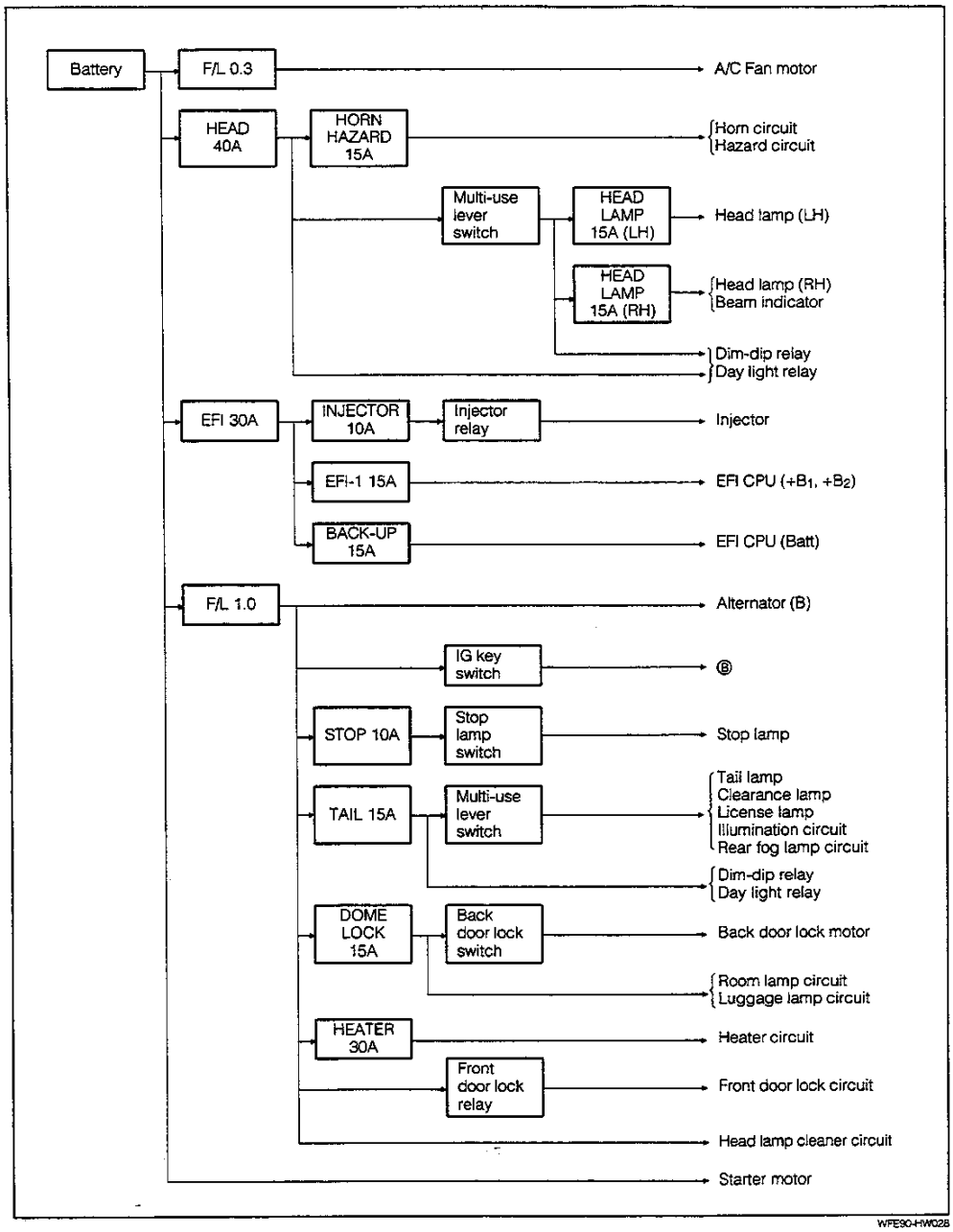

FUSE CIRCUIT (HD-E/German Specification)

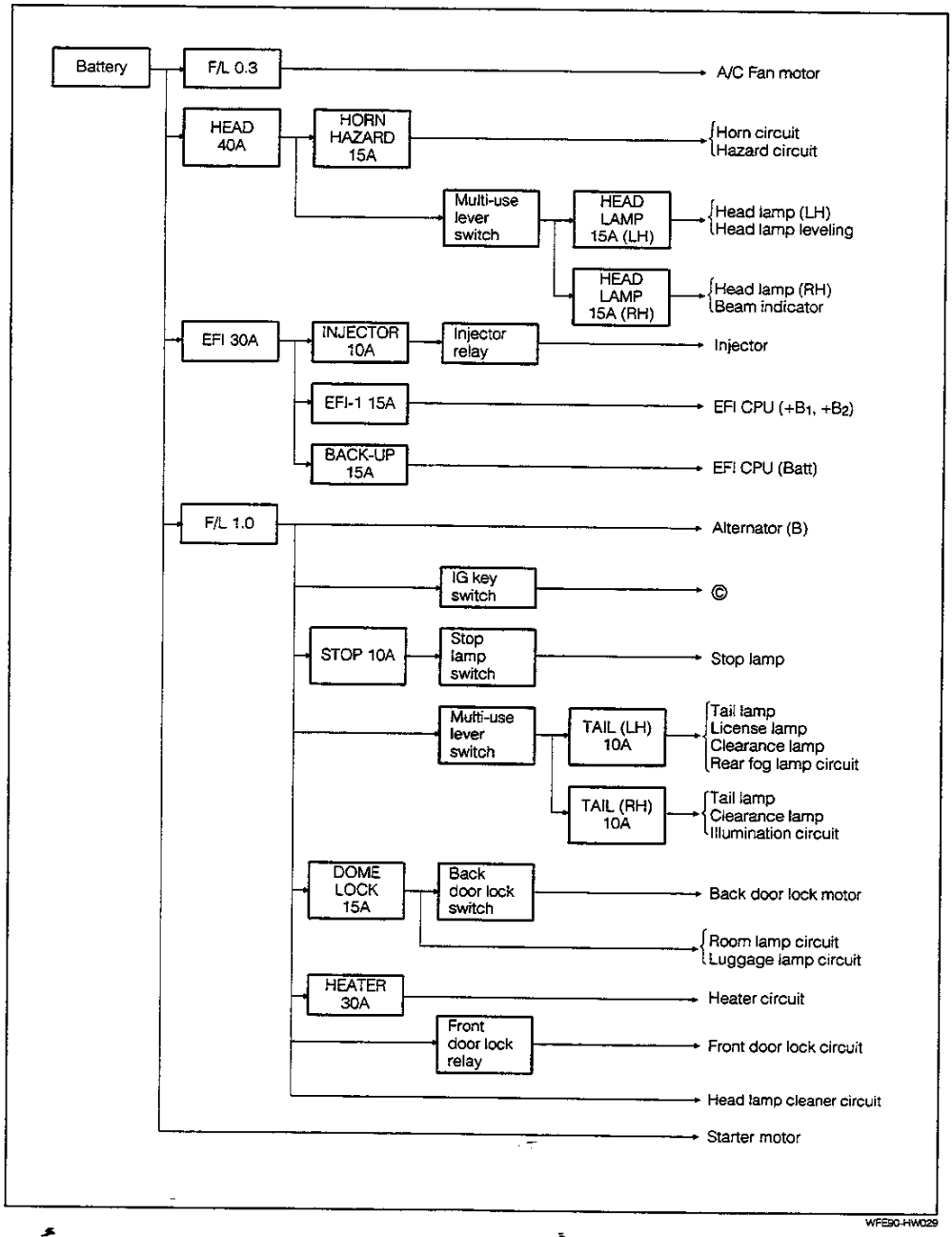

WFE90-HW029

FUSE CIRCUIT (HD-C engine)

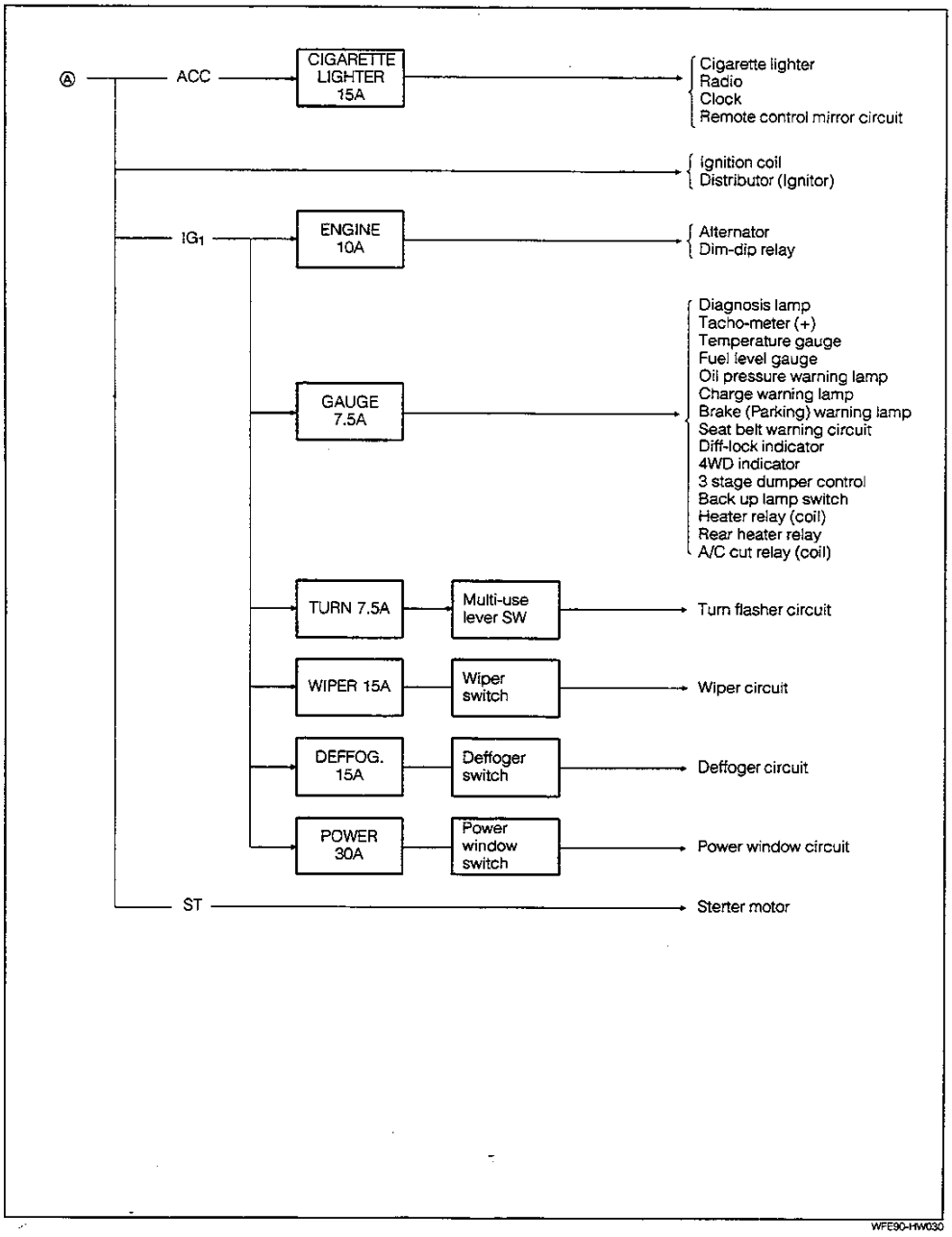

WFE90-HW030

FUSE CIRCUIT (HD-E engine)

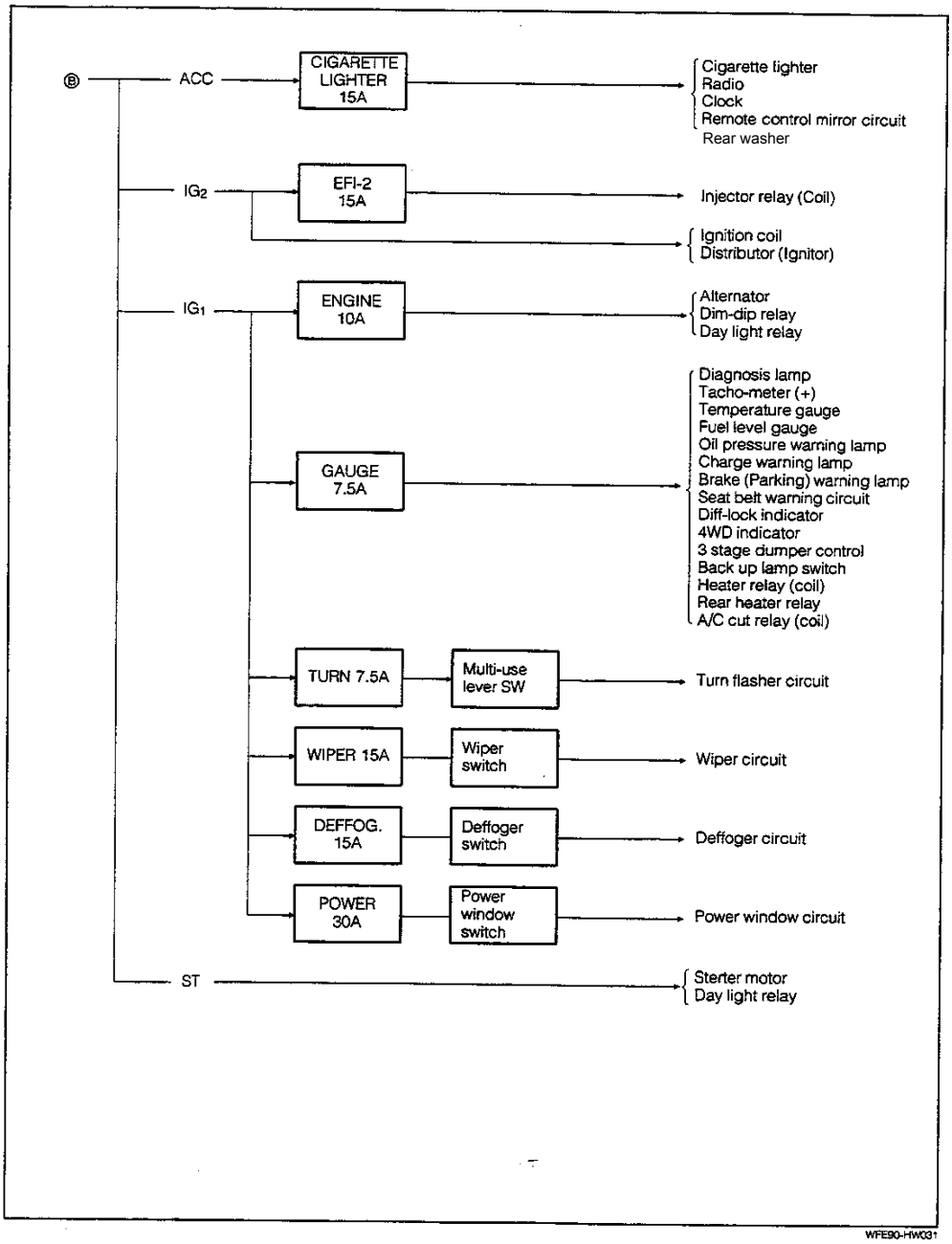

WFE90-HW031

FUSE CIRCUIT (HD-E/German Specification)

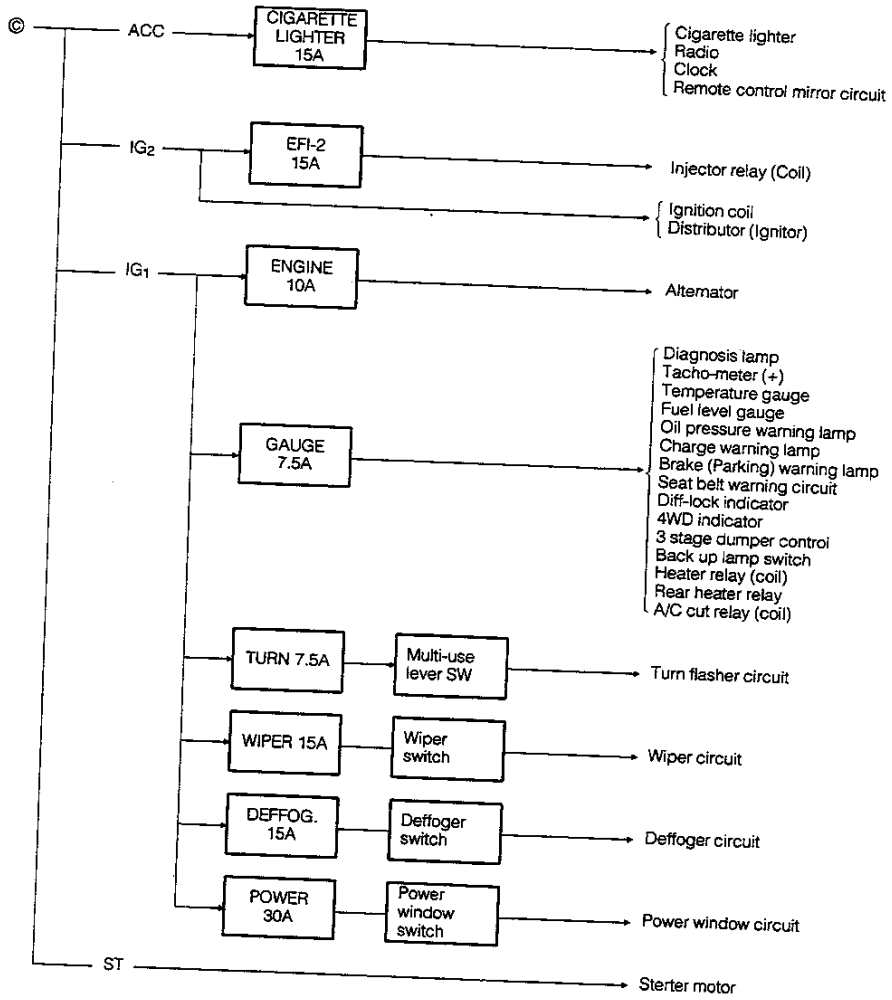

WFE90-HW032

WIRING HARNESSES

SCHEMATIC DIAGRAM

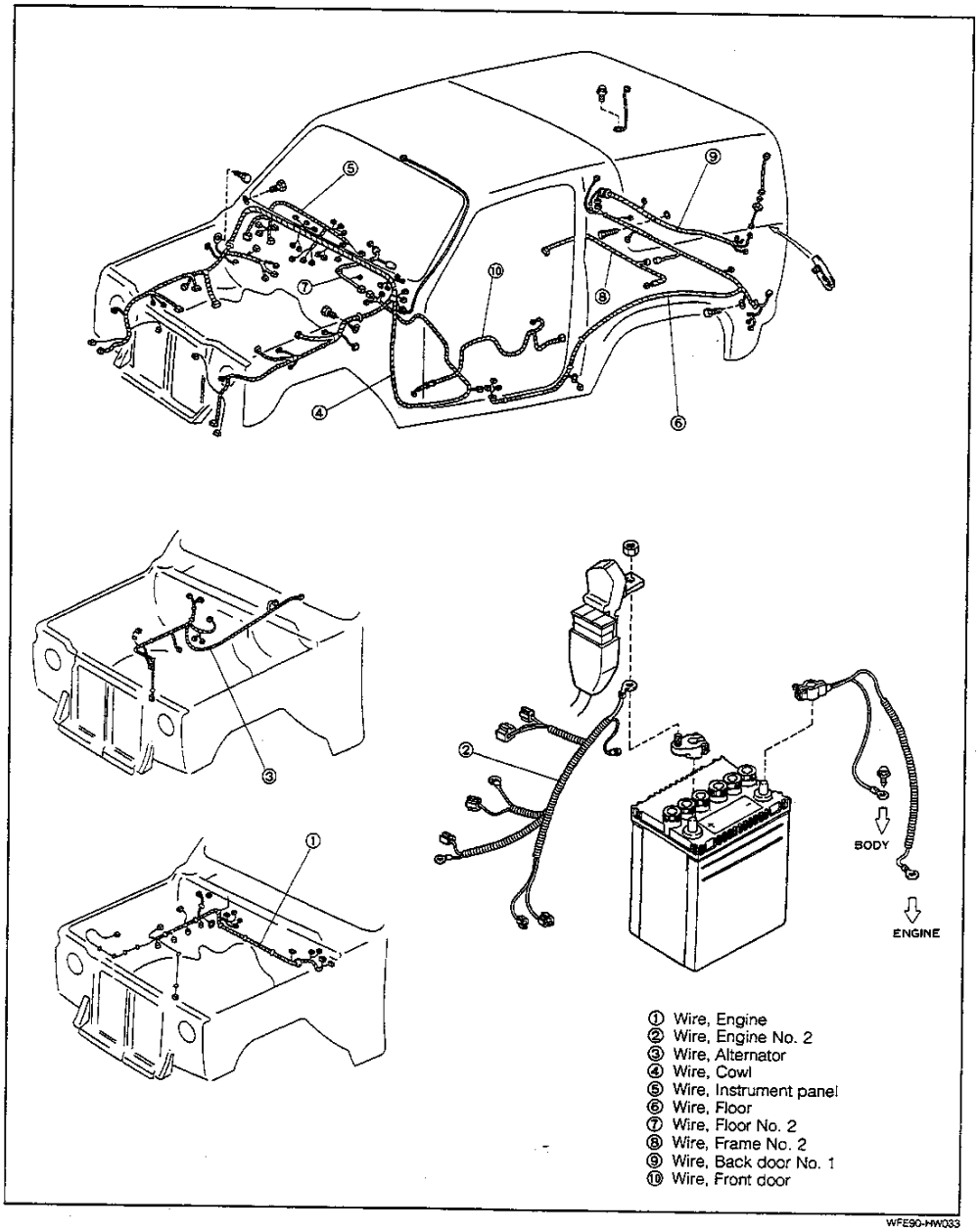

WFE90-HW033

WIRE, ENGINE (HD-E engine)

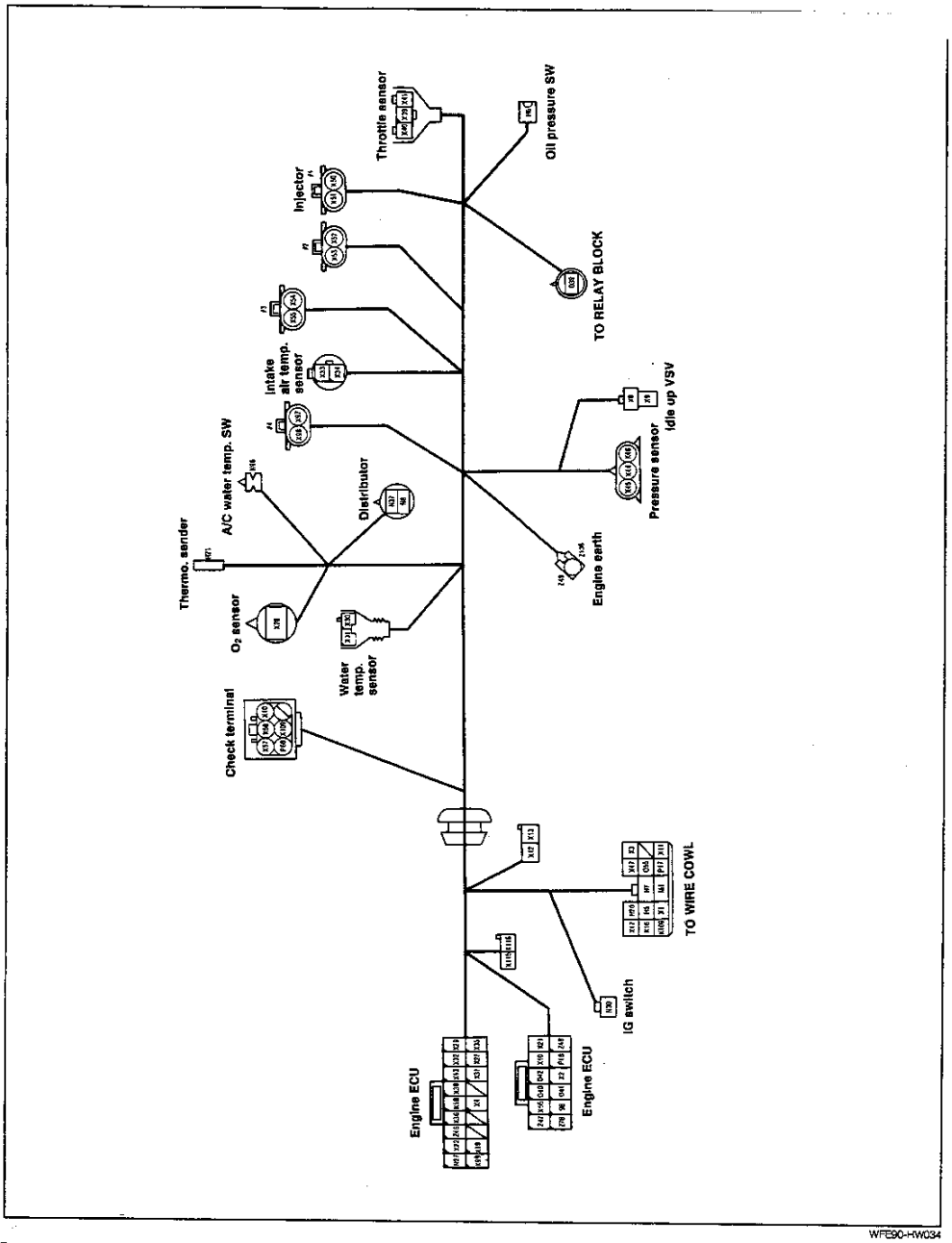

WFE90-HW034

WIRE, ENGINE NO. 2 (HD-E engine)

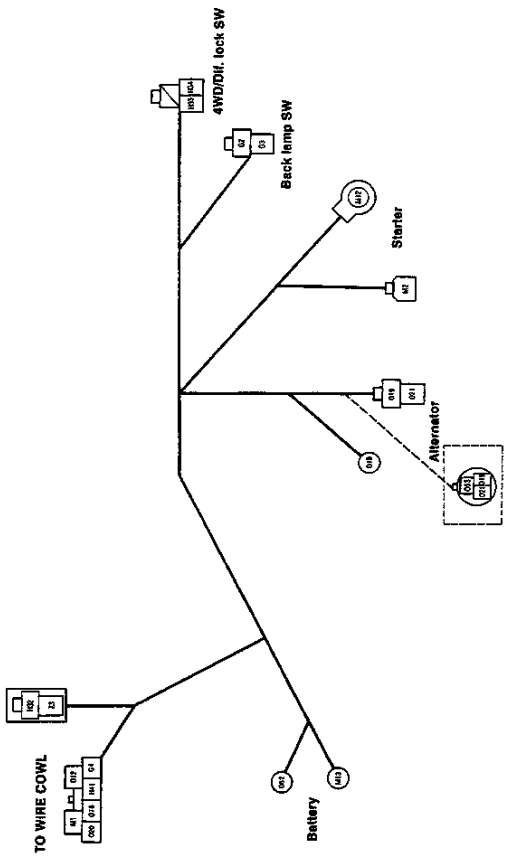

Terminal		Connection
M1	M2	IG SW (ST)	Starter magnet
M13	M12	Battery (+)	Starter (B)
O62	O18	Battery (+)	Alternator (B)
O12	O18	IG SW (AM)	
O20	O21	Meter, Charge (-)	Alternator (B)
O76	O19	Fuse, engine	Alternator (IG)
H41	G2	Fuse, gauge	Back lamp SW (+)
G3	G4	Back lamp SW (-)	Back lamp RH (+)
H32	H33	Meter, 4WD/Dif. lock	4WD/Dif. lock SW (-)
[illegible]	H34	Body earth	4WD/Dif. lock SW (-)

WFE90-HW035

WIRE, ALTERNATOR (HD-C engine)

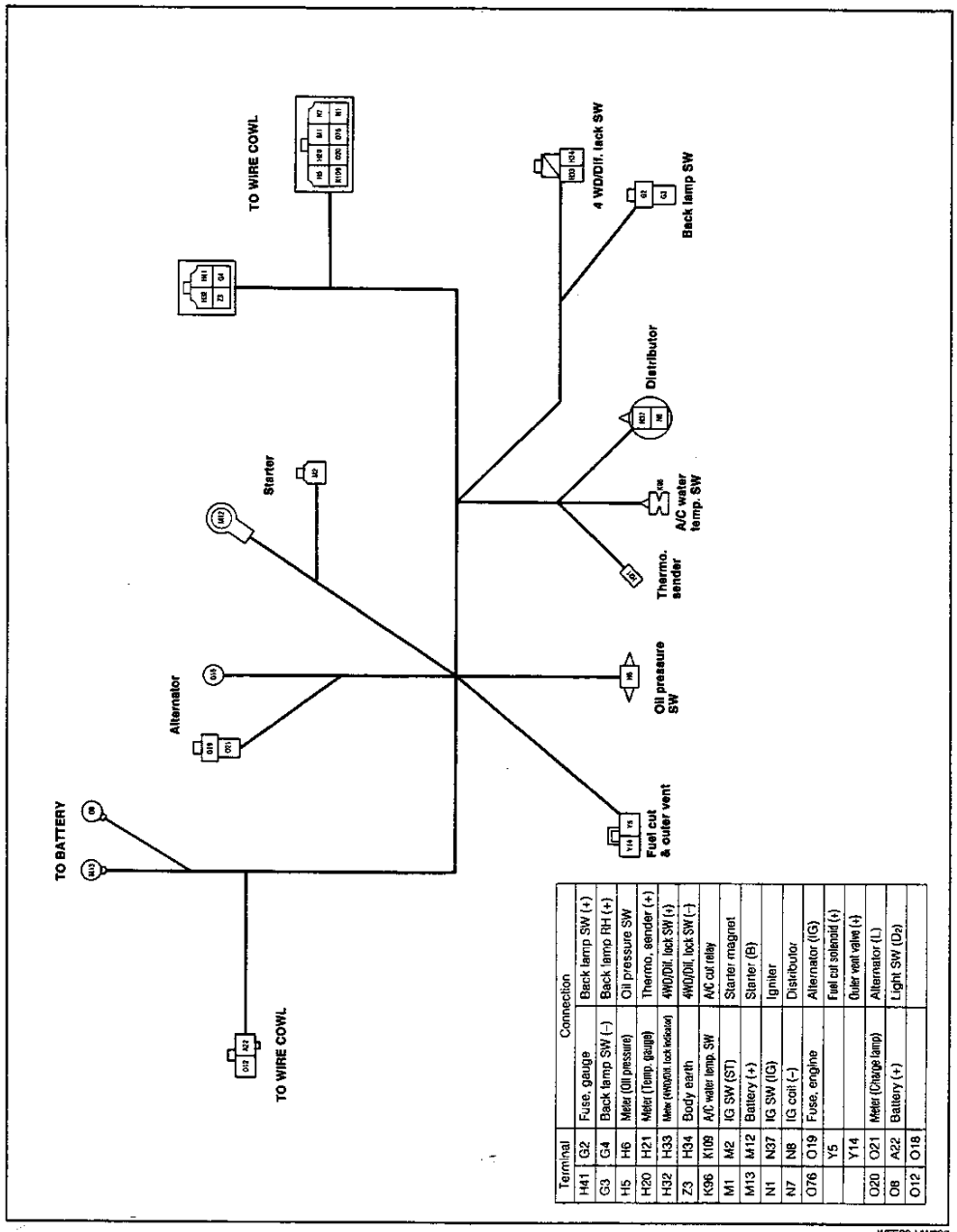

Terminal		Connection
H41	G2	Fuse, gauge
G3	G4	Back lamp SW (–)
H5	H6	Meter (Oil pressure)
H20	H21	Meter (Temp. gauge)
H32	H33	Meter (4WD/Dif. lock indicator)
Z3	H34	Body earth
K96	K109	A/C water temp. SW
M1	M2	IG SW (ST)
M13	M12	Battery (+)
N1	N37	IG SW (IG)
N7	N8	IG coil (–)
O76	O19	Fuse, engine
	Y5	
	Y14	
O20	O21	Meter (Charge lamp)
O8	A22	Battery (+)
O12	O18	

Connection:
Back lamp SW (+)
Back lamp RH (+)
Oil pressure SW
Thermo. sender (+)
4WD/Dif. lock SW (+)
4WD/Dif. lock SW (–)
A/C cut relay
Starter magnet
Starter (B)
Igniter
Distributor
Alternator (IG)
Fuse, engine
Fuel cut solenoid (+)
Outer vent valve (+)
Alternator (L)
Light SW (D2)

WFE90-HW036

WIRE, INSTRUMENT PANEL (RHD)

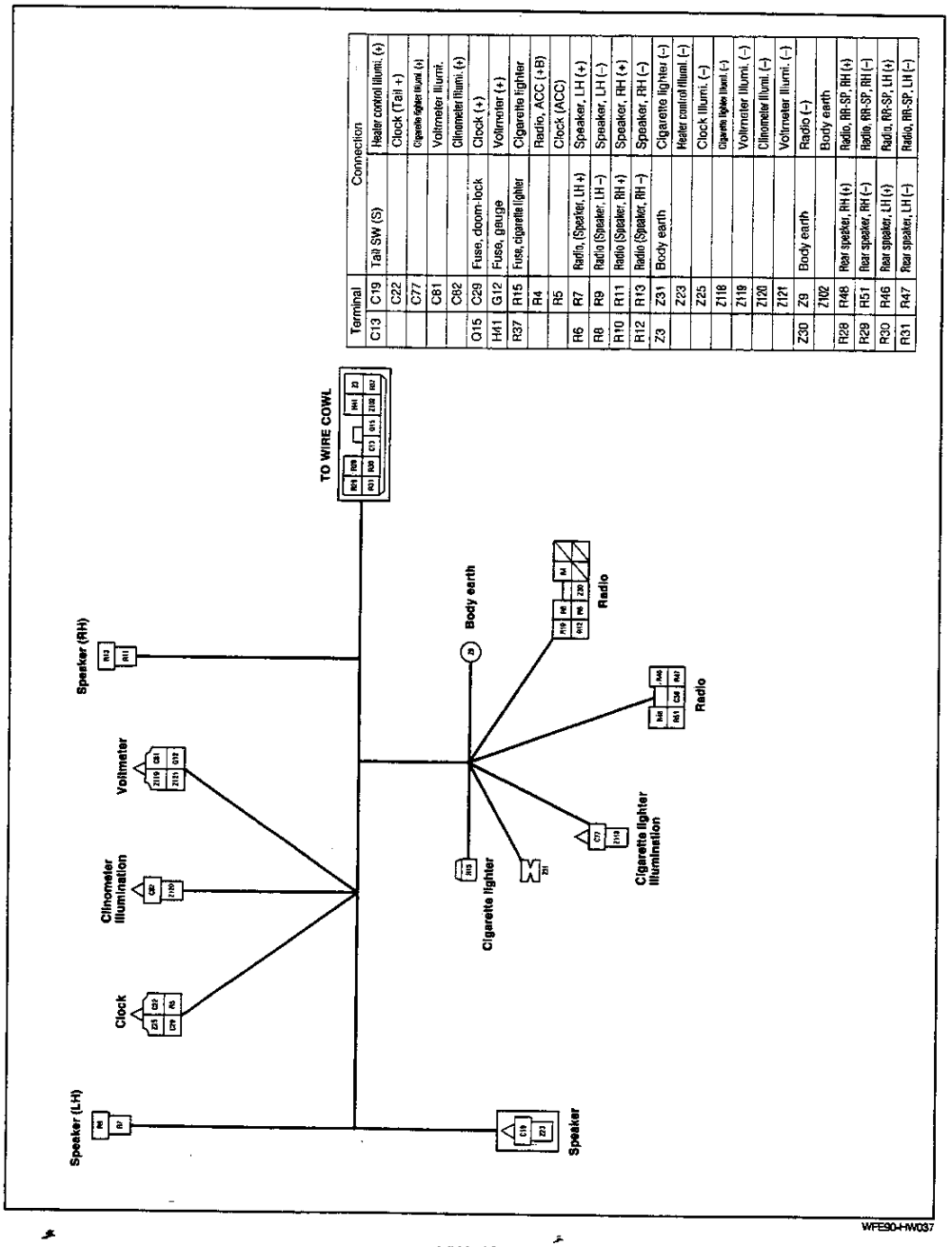

Terminal		Connection
C13	C19	Tail SW (S)
	C22	Heater control illumi. (+)
	C77	Clock (Tail +)
	C81	Cigarette lighter illumi. (+)
	C82	Voltmeter illumi.
Q15	C29	Clinometer illumi. (+)
H41	G12	Fuse, doom-lock
R37	R15	Clock (+)
	R4	Fuse, gauge
	R5	Voltmeter (+)
R6	R7	Fuse, cigarette lighter
R8	R9	Radio, ACC (+B)
R10	R11	Clock (ACC)
R12	R13	Radio, (Speaker, LH +)
Z3	Z31	Radio (Speaker, LH −)
	Z23	Radio (Speaker, RH +)
	Z25	Radio (Speaker, RH −)
	Z118	Body earth
	Z119	Cigarette lighter (+)
	Z120	Heater control illumi. (−)
	Z121	Clock, illumi. (−)
Z30	Z9	Cigarette lighter illumi. (−)
	Z102	Voltmeter illumi. (−)
R28	R48	Clinometer illumi. (−)
R29	R51	Voltmeter illumi. (−)
R30	R46	Radio (−)
R31	R47	Body earth
		Radio, RR-SP, RH (+)
		Radio, RR-SP, RH (−)
		Radio, RR-SP, LH (+)
		Radio, RR-SP, LH (−)

WIRE, INSTRUMENT PANEL (LHD)

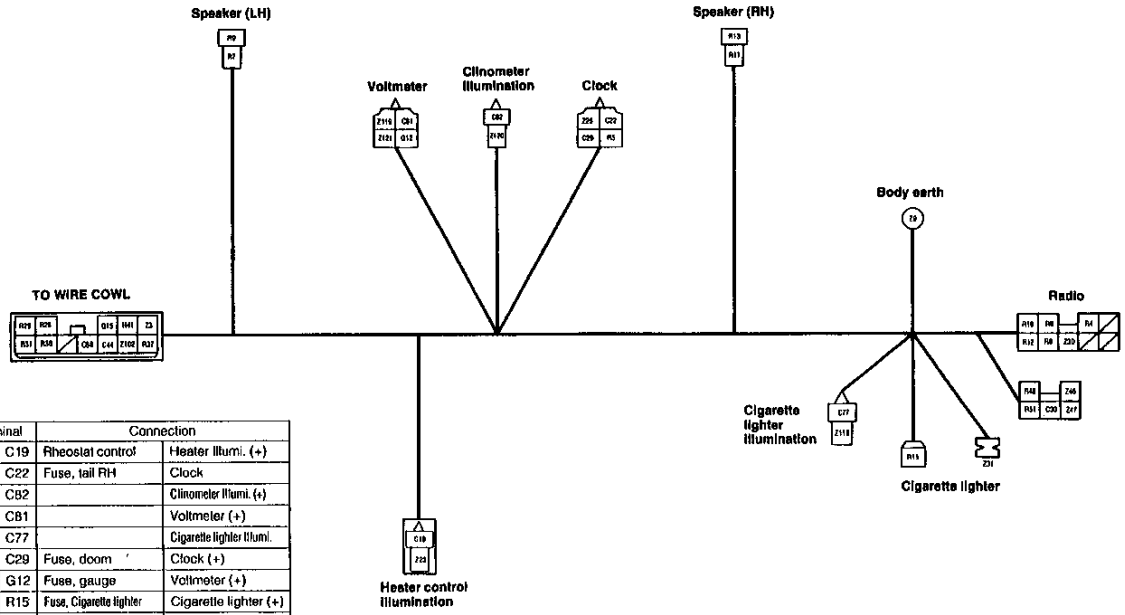

Terminal		Connection	
C44	C19	Rheostat control	Heater illumi. (+)
C88	C22	Fuse, tail RH	Clock
	C82		Clinometer illumi. (+)
	C81		Voltmeter (+)
	C77		Cigarette lighter illumi.
Q15	C29	Fuse, doom	Clock (+)
H41	G12	Fuse, gauge	Voltmeter (+)
R37	R15	Fuse, Cigarette lighter	Cigarette lighter (+)
	R5		Clock (ACC)
	R4		Radio (+)
R10	R11	Radio, speaker RH (+)	Speaker, RH (+)
R12	R13	Radio, speaker RH (–)	Speaker, RH (–)
R8	R9	Radio, speaker LH (+)	Speaker, LH (–)
R6	R7	Radio, speaker LH (–)	Speaker, LH (+)
Z3	Z31	Body earth	Cigarette lighter (–)
	Z23		Heater control illumi. (–)
	Z25		Clock (–)
	Z121		Voltmeter (–)
	Z120		Clinometer illumi. (–)
	Z119		Voltmeter illumi. (–)
	Z118		Cigarette lighter illumi. (–)

Z9	Z30	Body earth	Radio (–)
	Z102		Body earth
R28	R48	Rear speaker, RH (+)	Radio, SP-RH (+)
R30	R46	Rear speaker, LH (+)	Radio, SP-LH (+)
R29	R51	Rear speaker, RH (–)	Radio, SP-RH (–)
R31	R47	Rear speaker, LH (–)	Radio, SP-LH (–)
	C30		Radio (back up)

WIRE, COWL (RHD)

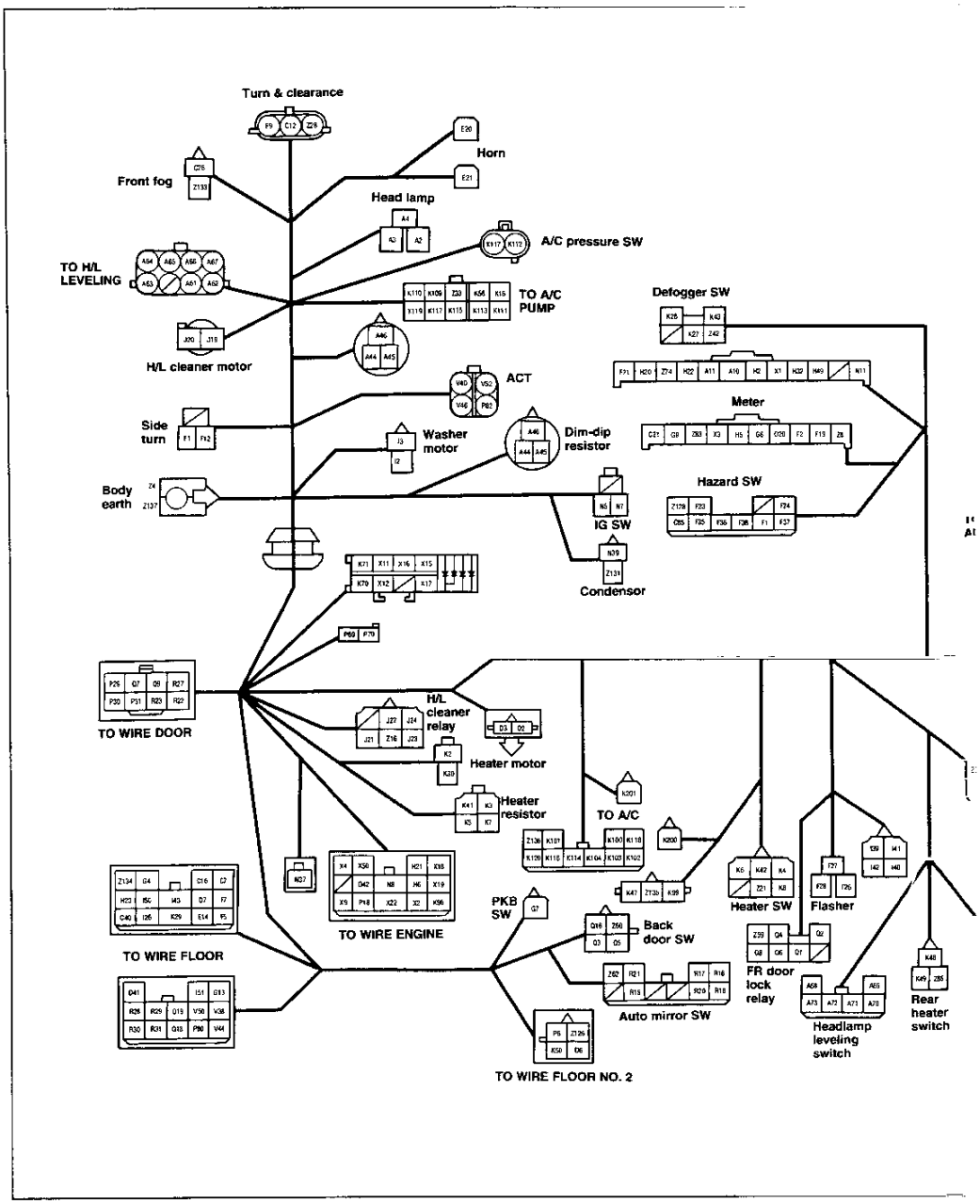

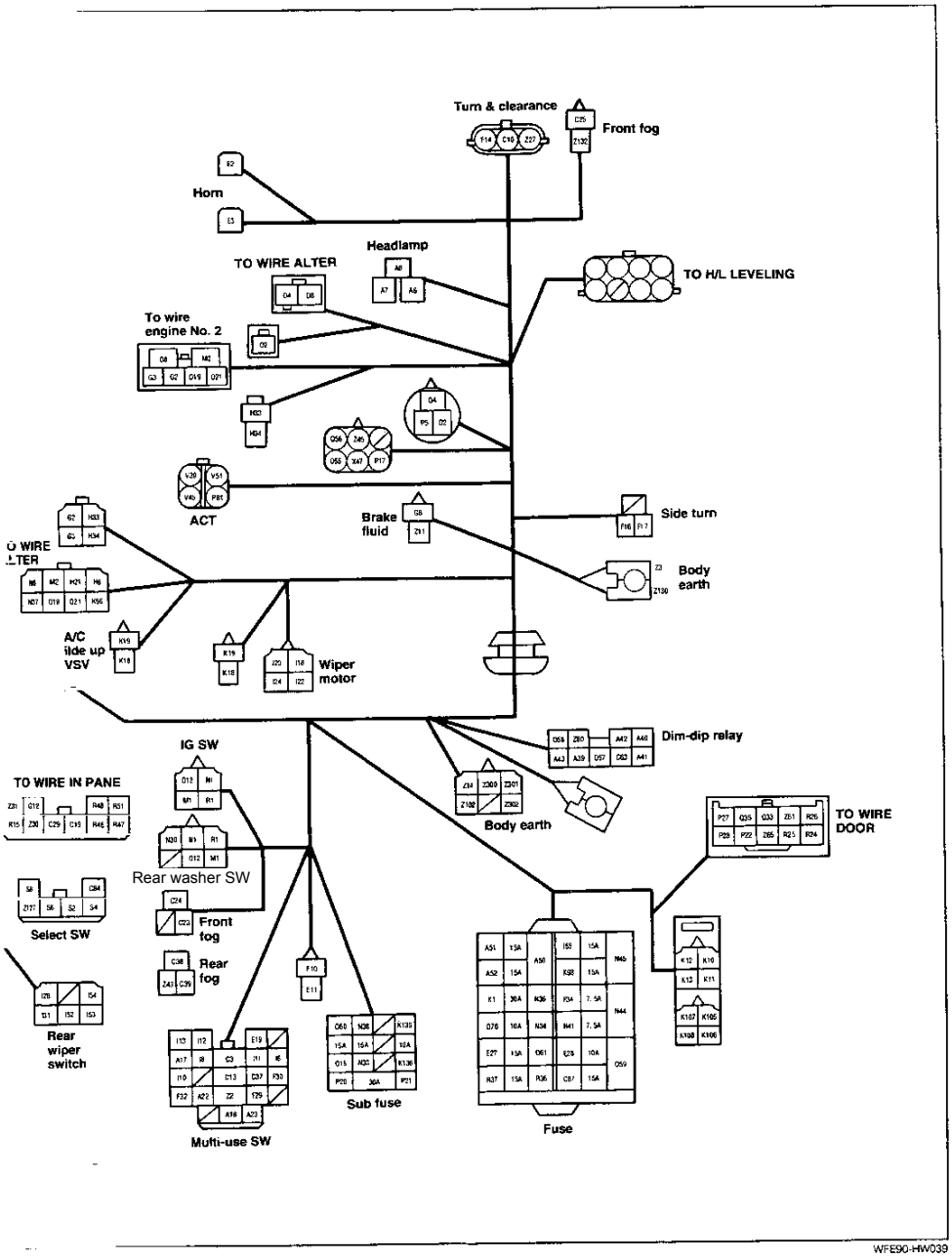
Turn & clearance
Front fog
Horn
Headlamp
TO WIRE ALTER
TO H/L LEVELING
To wire engine No. 2
ACT
Brake fluid
Side turn
Body earth
A/C idle up VSV
Wiper motor
Dim-dip relay
IG SW
TO WIRE IN PANE
Body earth
TO WIRE DOOR
Rear washer SW
Front fog
Rear fog
Select SW
Rear wiper switch
Sub fuse
Fuse
Multi-use SW

WFE90-HW039

WIRE, COWL (LHD)

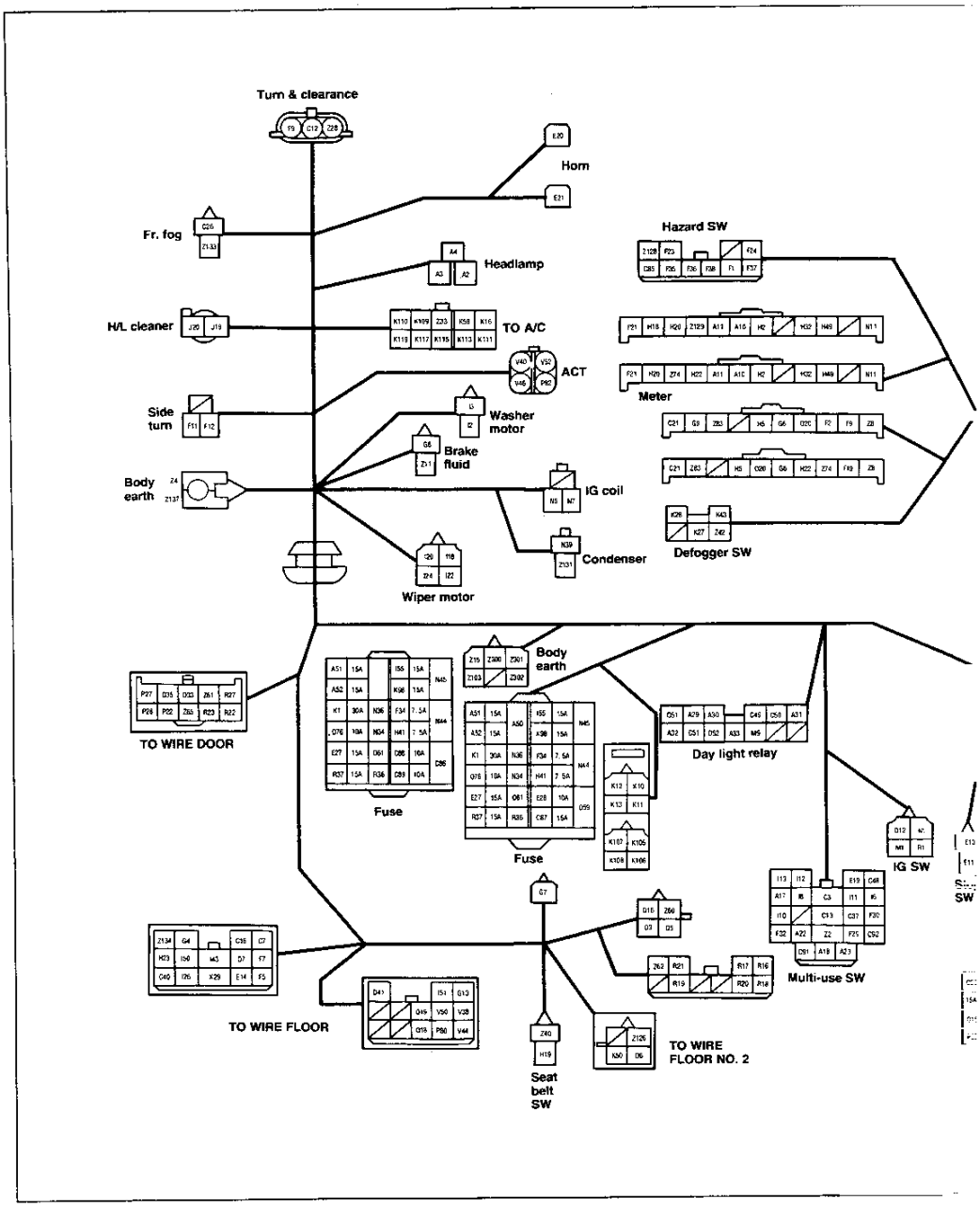

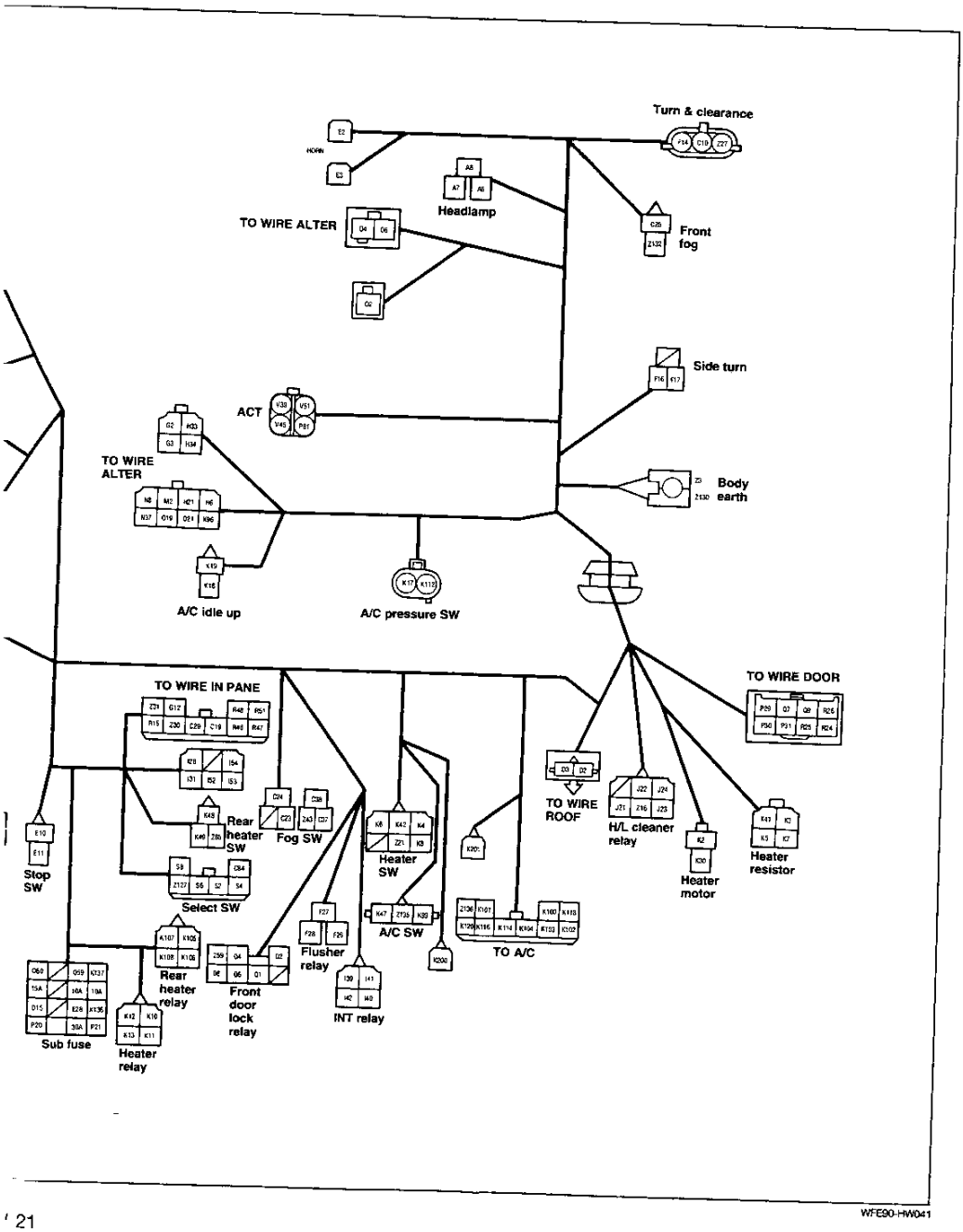
Turn & clearance
HORN
Headlamp
TO WIRE ALTER
Front fog
Side turn
ACT
TO WIRE ALTER
Body earth
A/C idle up
A/C pressure SW
TO WIRE IN PANE
TO WIRE DOOR
Rear heater SW
Fog SW
Heater SW
TO WIRE ROOF
H/L cleaner relay
Heater resistor
Heater motor
Stop SW
Select SW
A/C SW
Flusher relay
TO A/C
Rear heater relay
Front door lock relay
INT relay
Sub fuse
Heater relay

WFE90-HW041

WIRE, COWL (German Spec.)

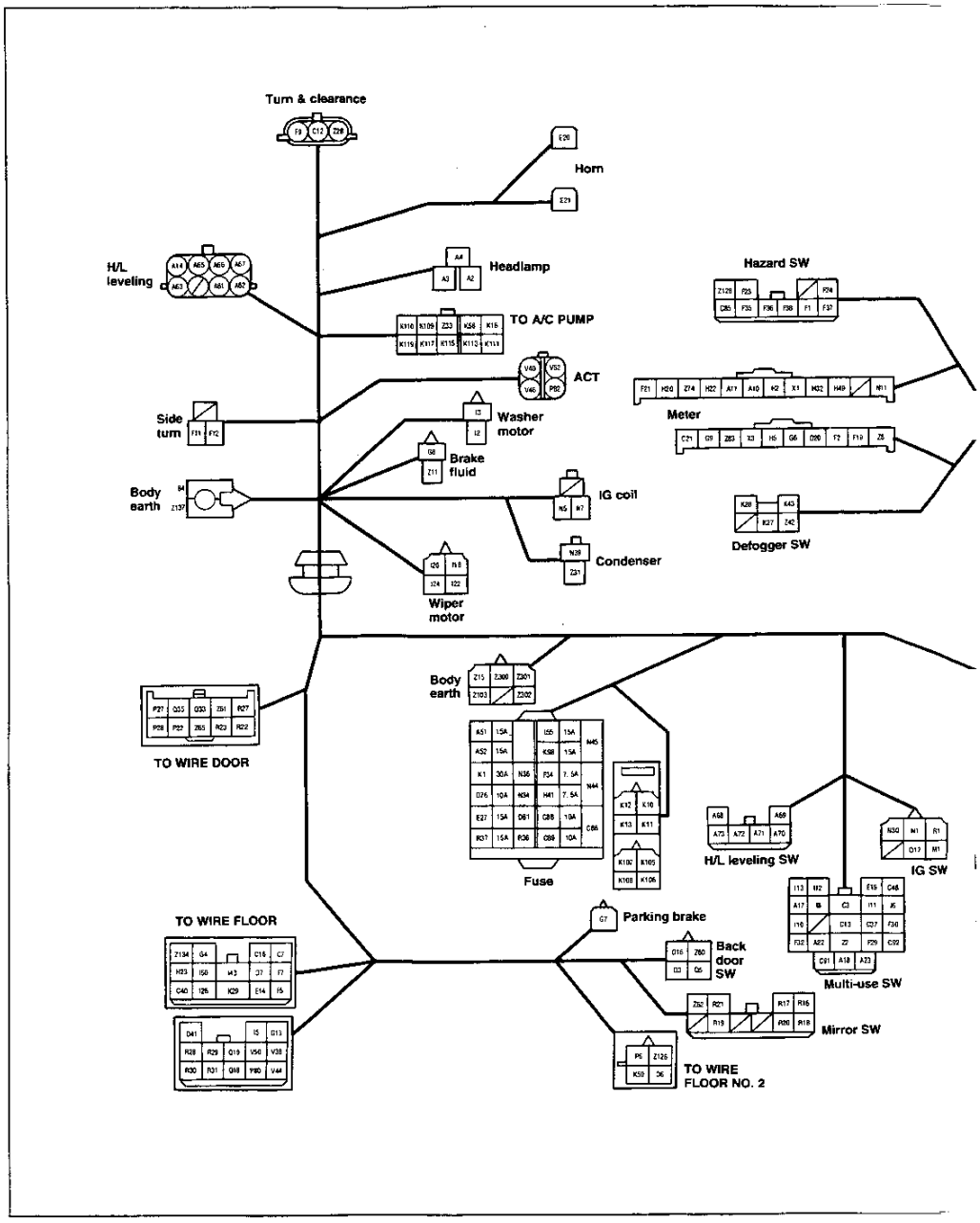

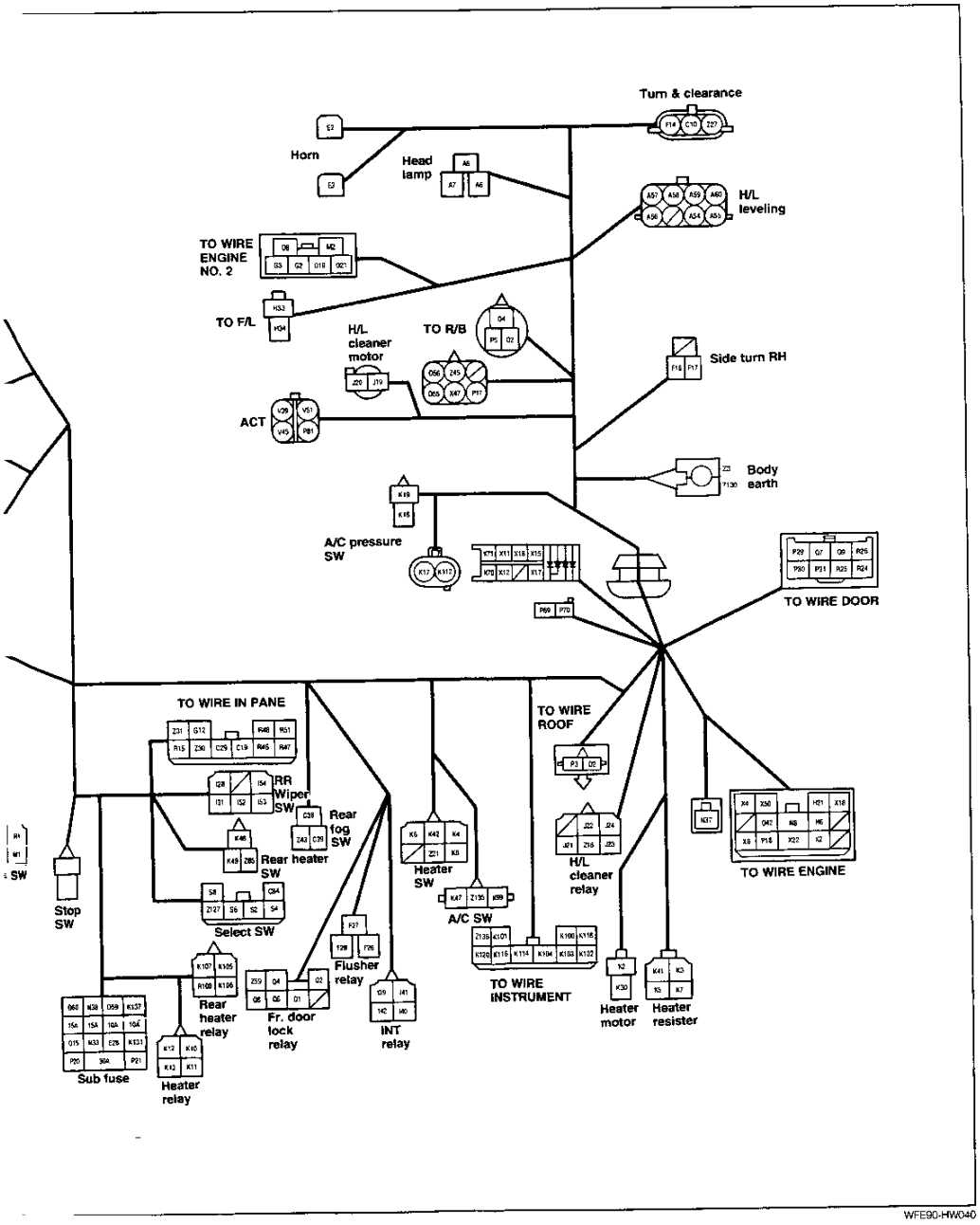
Turn & clearance
Horn
Head lamp
H/L leveling
TO WIRE ENGINE NO. 2
TO F/L
H/L cleaner motor
TO R/B
Side turn RH
ACT
Body earth
A/C pressure SW
TO WIRE DOOR
TO WIRE IN PANE
TO WIRE ROOF
RR Wiper SW
Rear fog SW
Rear heater SW
Heater SW
H/L cleaner relay
TO WIRE ENGINE
Stop SW
Select SW
A/C SW
Flusher relay
Rear heater relay
Fr. door lock relay
INT relay
TO WIRE INSTRUMENT
Heater motor
Heater resister
Sub fuse
Heater relay

WFE90-HW040

WIRE, FLOOR

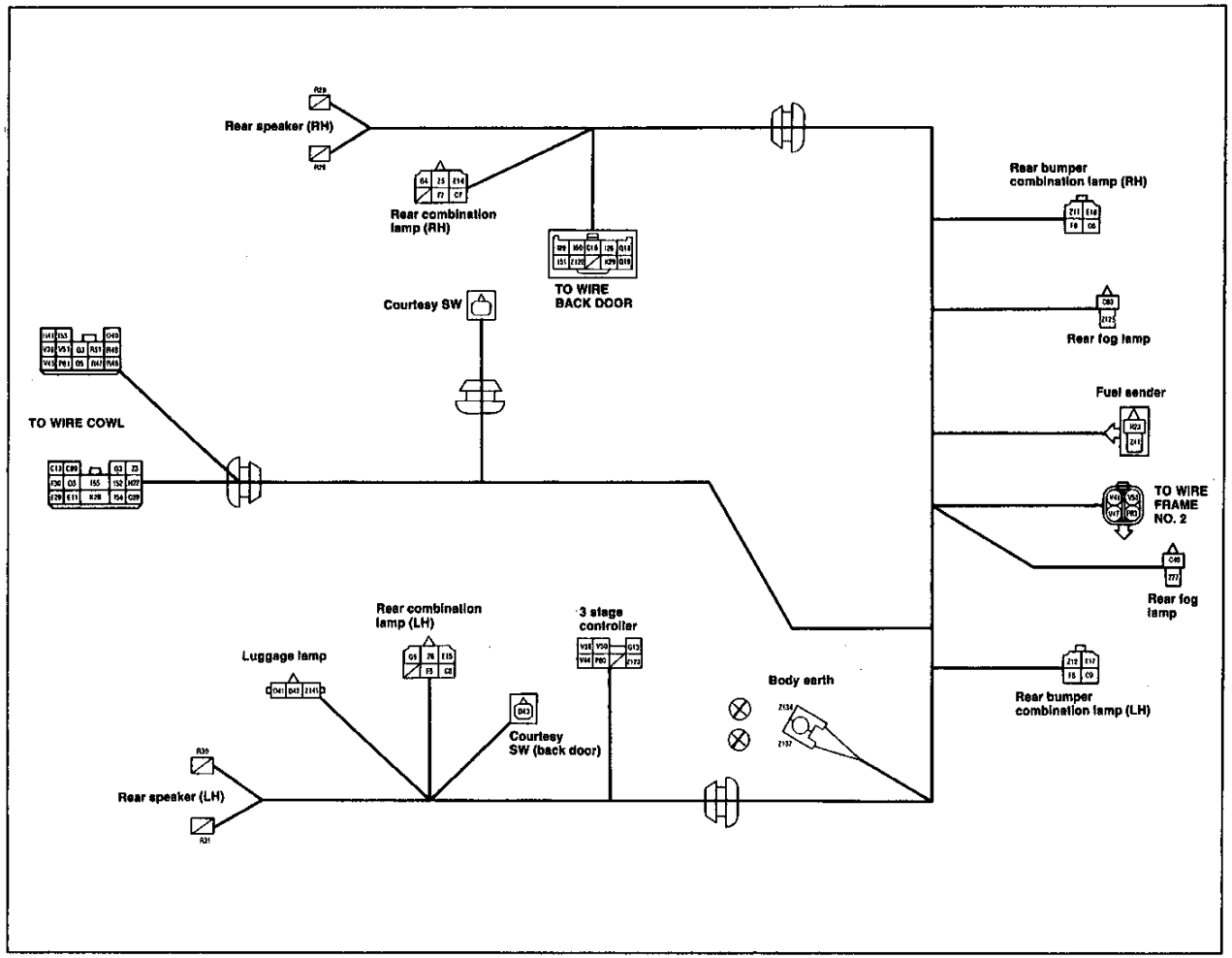
Rear speaker (RH)
Rear combination lamp (RH)
TO WIRE BACK DOOR
Courtesy SW
TO WIRE COWL
Rear bumper combination lamp (RH)
Rear fog lamp
Fuel sender
TO WIRE FRAME NO. 2
Rear fog lamp
Rear bumper combination lamp (LH)
Rear combination lamp (LH)
3 stage controller
Luggage lamp
Body earth
Courtesy SW (back door)
Rear speaker (LH)

WIRE, FRAME NO. 2 (For 3 stage dumper)

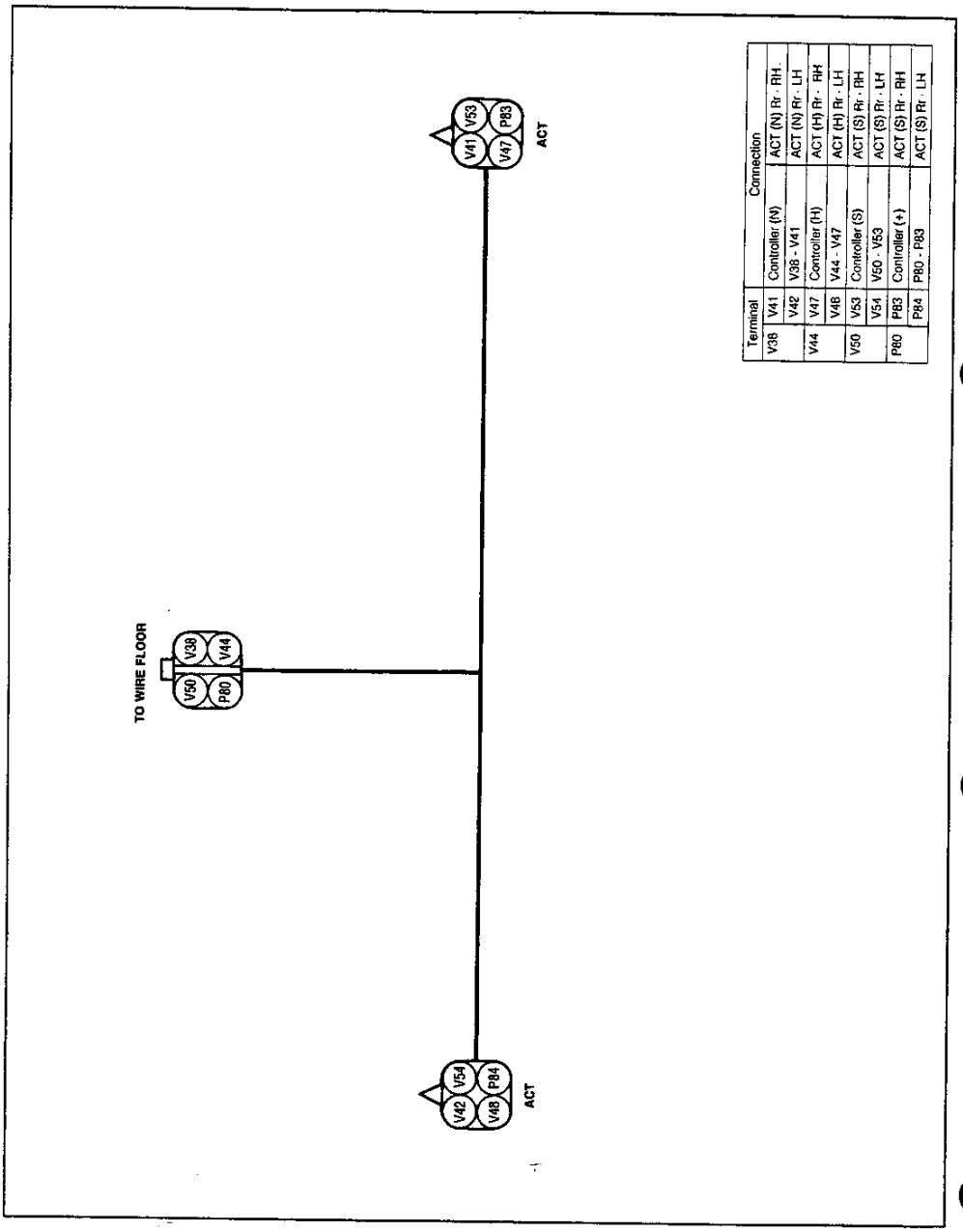

Terminal		Connection
V38	V41	Controller (N) — ACT (N) Rr - RH
	V42	V38 - V41 — ACT (N) Rr - LH
V44	V47	Controller (H) — ACT (H) Rr - RH
	V48	V44 - V47 — ACT (H) Rr - LH
V50	V53	Controller (S) — ACT (S) Rr - RH
	V54	V50 - V53 — ACT (S) Rr - LH
P80	P83	Controller (+) — ACT (S) Rr - RH
	P84	P80 - P83 — ACT (S) Rr - LH

WFE90-HW044

WIRE, BACK DOOR NO. 1

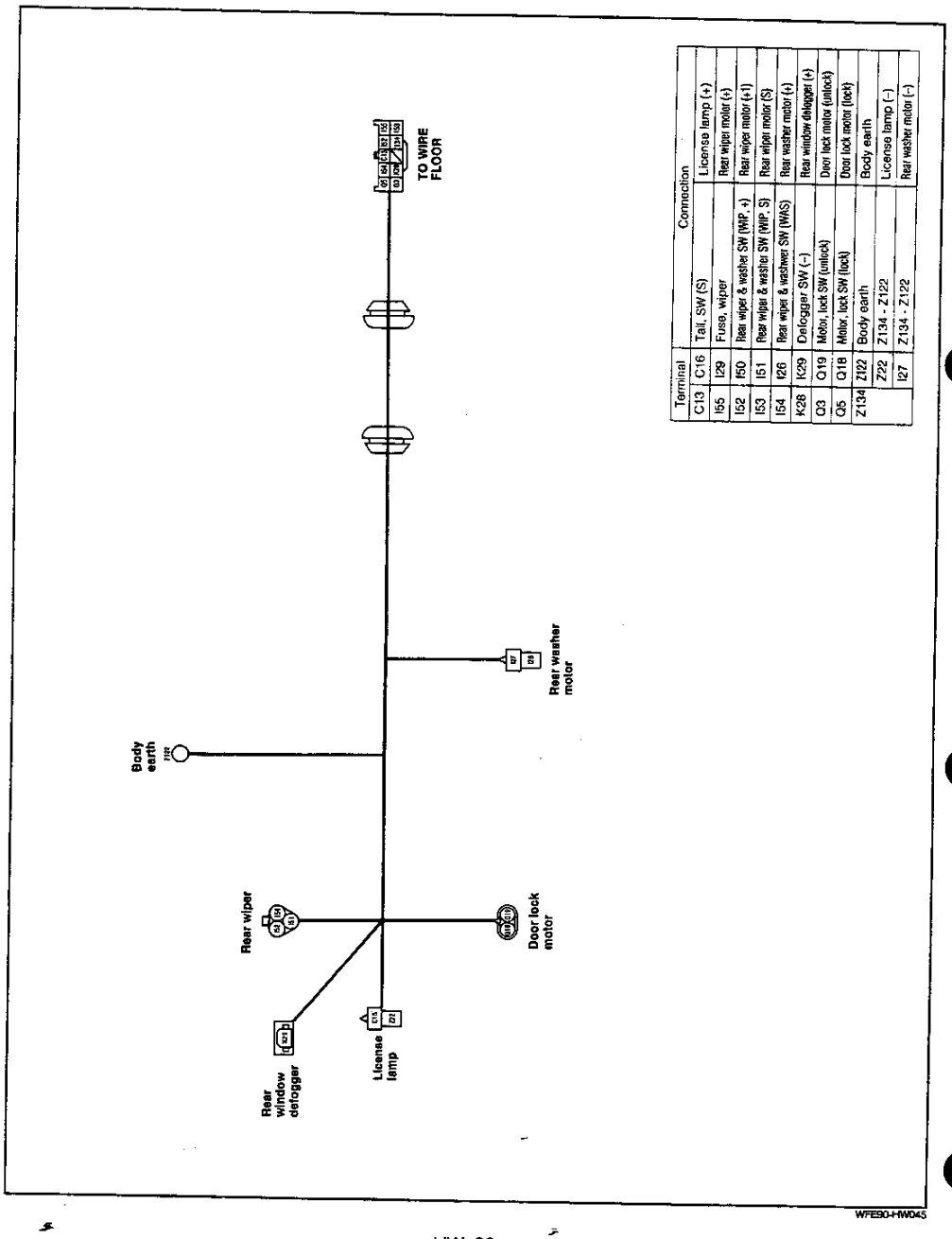

Terminal		Connection
C13	C16	Tail, SW (S)
		License lamp (+)
I55	I29	Fuse, wiper
		Rear wiper motor (+)
I52	I50	Rear wiper & washer SW (WIP, +)
		Rear wiper motor (+1)
I53	I51	Rear wiper & washer SW (WIP, S)
		Rear wiper motor (S)
I54	I26	Rear wiper & washwer SW (WAS)
		Rear washer motor (+)
K28	K29	Defogger SW (–)
		Rear window defogger (+)
Q3	Q19	Motor, lock SW (unlock)
		Door lock motor (unlock)
Q5	Q18	Motor, lock SW (lock)
		Door lock motor (lock)
Z134	Z122	Body earth
		Body earth
	Z22	Z134 - Z122
		License lamp (–)
	I27	Z134 - Z122
		Rear washer motor (–)

WFE90-HW045

WIRE, FLOOR NO. 2

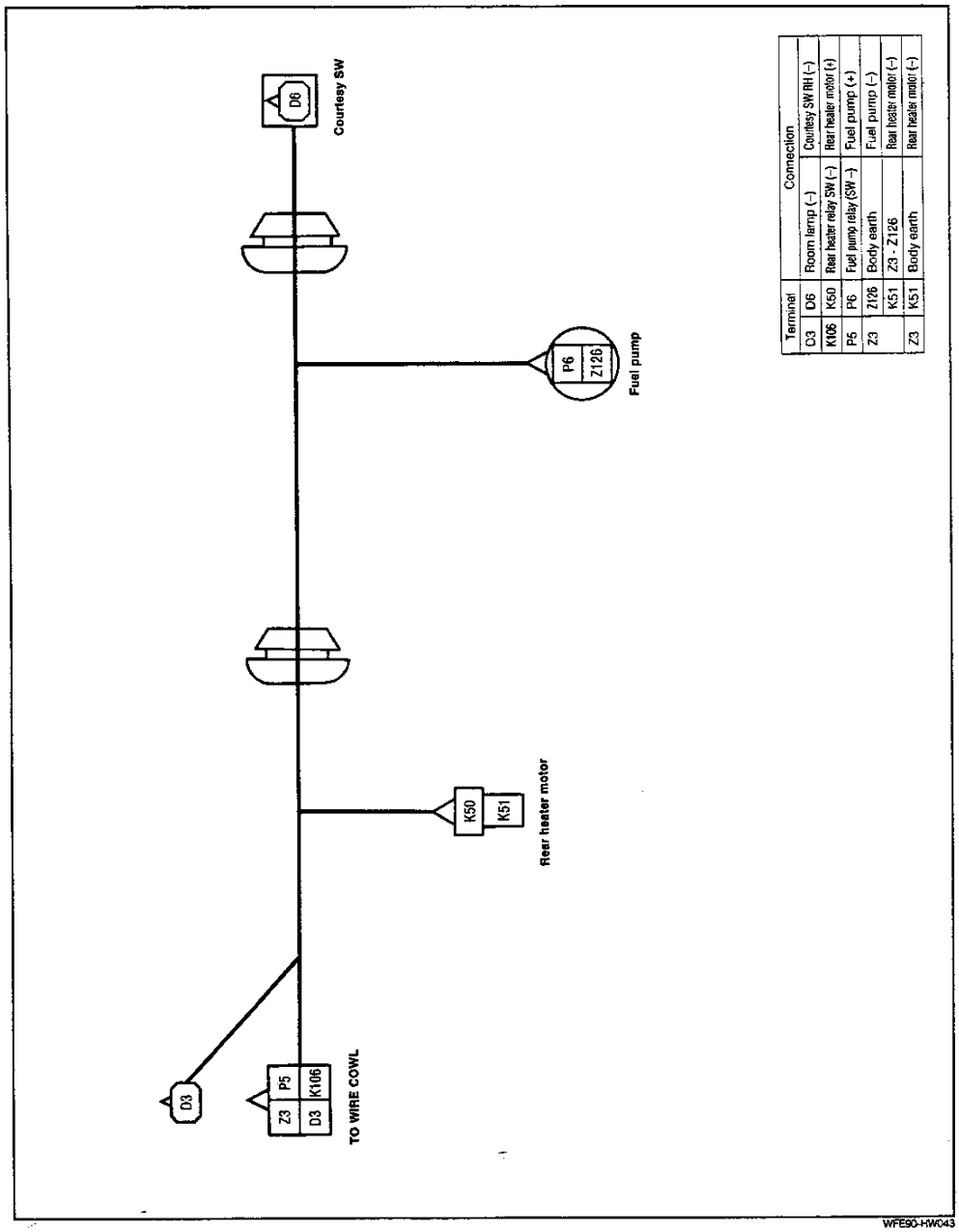

Terminal		Connection
D3	D6	Room lamp (-)
K106	K50	Rear heater relay SW (-)
P5	P6	Fuel pump relay (SW -)
Z3	Z126	Body earth
	K51	Z3 - Z126
Z3	K51	Body earth

Terminal		Connection
D3	D6	Courtesy SW RH (-)
K106	K50	Rear heater motor (+)
P5	P6	Fuel pump (+)
Z3	Z126	Fuel pump (-)
	K51	Rear heater motor (-)
Z3	K51	Rear heater motor (-)

WFE90-HW043

WIRE, FRONT DOOR (RH)

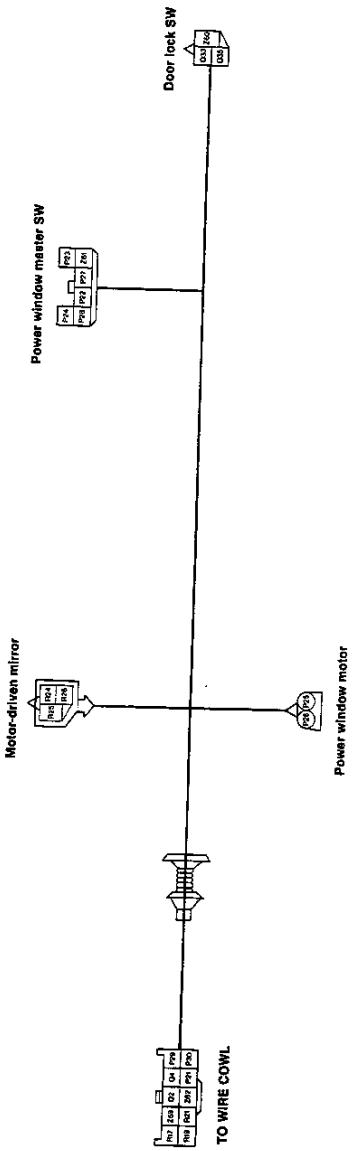

Terminal		Connection
P21	P22	P/W C/B (+)
P23	P25	P/W master SW (D/up +)
P24	P26	P/W master SW (D/down +)
P27	P29	P/W master SW (F/up +)
P28	P30	P/W master SW (F/down +)
Q2	Q33	Door lock control relay (unlock)
Q4	Q35	Door lock control relay (lock)
R17	R26	Door mirror SW (motor −)
R19	R24	Door mirror SW (VR)
R21	P25	Door mirror SW (HR)
Z59	Z61	Body earth
Z62	Z60	Body earth
		P/W master SW (P)
		P/W motor (D/up +)
		P/W motor (D/down +)
		P/W SW (F/up +)
		P/W SW (F/down +)
		Door lock control SW (unlock)
		Door lock control SW (lock)
		Door mirror (RH −)
		Door mirror (VR +)
		Door mirror (HR +)
		P/W SW (E)
		Door lock control SW (E)

WFE90-HW047

WIRE, FRONT DOOR (LH)

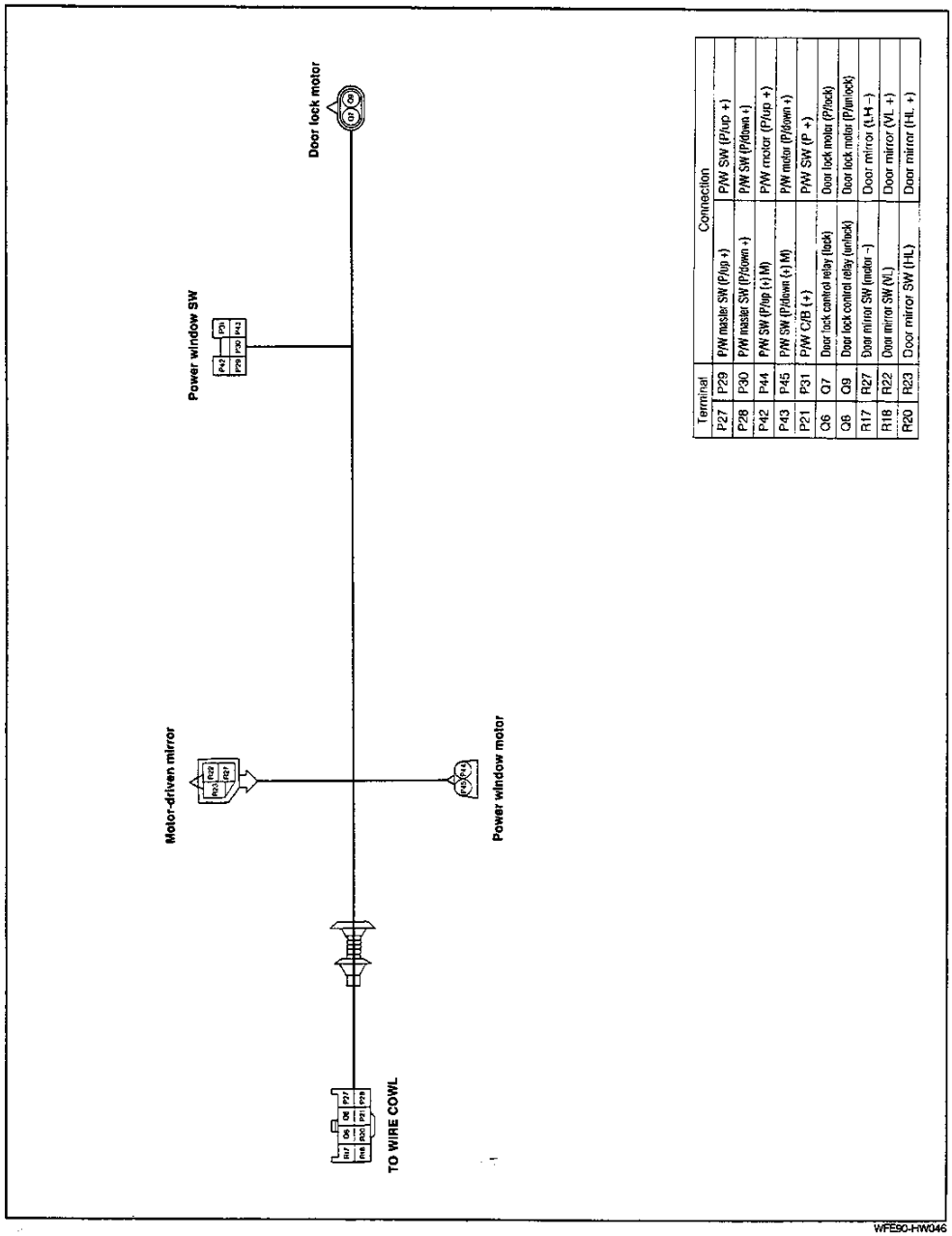

Terminal		Connection	
P27	P29	P/W master SW (P/up +)	P/W SW (P/up +)
P28	P30	P/W master SW (P/down +)	P/W SW (P/down +)
P42	P44	P/W SW (P/up (+) M)	P/W motor (P/up +)
P43	P45	P/W SW (P/down (+) M)	P/W motor (P/down +)
P21	P31	P/W C/B (+)	P/W SW (P +)
Q6	Q7	Door lock control relay (lock)	Door lock motor (P/lock)
Q8	Q9	Door lock control relay (unlock)	Door lock motor (P/unlock)
R17	R27	Door mirror SW (motor −)	Door mirror (L.H −)
R18	R22	Door mirror SW (VL)	Door mirror (VL +)
R20	R23	Door mirror SW (HL)	Door mirror (HL +)

WFE90-HW046

WIRE, ENGINE

Terminal		Connection	
H5	H6	Meter, oil pressure	Oil pressure SW
H20	H21	Meter, temp. gauge	Thermo. sender (+)
K16	X19	A/C magnet clutch	ECU (A/C)
K96	K109	Water temp. SW (A/C)	A/C cut relay
N37	N30	Igniter (+B)	IG SW (IG2)
N7	N27	IG coil (–)	ECU (IG)
	N8		Distributor (–)
O55	O42	Fuse, back-up (–)	ECU (BATT)
O39	O40	Relay box, EFI main (–)	ECU (+E1)
	O41		ECU (+B2)
	X8		Idle up VSV (+)
P17	P18	Fuel pump relay coil (–)	ECU (FC)
	P68		Check terminal (F/P)
X1	X2	Meter, diag.	ECU (W)
	X109		Check terminal (W)
X3	X4	Meter, read SW	ECU (SPD)
X9	X12	Idle up VSV (–)	Diode
	X11		Blower SW
X17	X18	Diode (–)	ECU (ELS)
X20	X21	VF output	ECU (VF)
X13	X10	Diode	ECU (Visc)
X29	X30	ECU (THW)	Water temp. (+)
X32	X33	ECU (THA)	Intake temp. (+)
X35	X39	ECU (E2)	Throttle sensor (E2)
	X31		Water temp. sensor (–)
	X34		Intake temp. sensor (–)
X99	X44	ECU (E21)	Pressure sensor (E21)
X36	X40	ECU (IDL)	Throttle sensor (IDL)
X37	X41	ECU (PSW)	Throttle sensor (PSW)
X38	X46	ECU (VCC)	Pressure sensor (VCC)
X43	X45	ECU (PIM)	Pressure sensor (PIM)
X47	X50	Injector relay (–)	Injector #1 (+)
	X52		Injector #2 (+)
	X54		Injector #3 (+)
	X97		Injector #4 (+)

Terminal		Connection	
X56	X55	ECU #10	Injector #3 (–)
	X51		Injector #1 (–)
	X53		Injector #2 (–)
	X98		Injector #4 (–)
	X96		ECU #20
X22	X116	ECU (STA)	Diode
M1	X115	IG SW (ST)	Diode
Z46	X57	ECU (T1)	Check terminal (T1+)
Z47	Z49	ECU (E01)	Engine earth
Z48	Z138	ECU (E1)	Engine earth
	X58		Check terminal (T1–)
	X85		Sealed wire
	X88		Sealed wire
Z44	Z76	Engine earth	ECU (E02)
X27	X28	ECU	O_2 sensor

WFE90-HW050

WIRE, COWL (RHD) — (1)

Terminal		Connection	
O4	A22	Fusible link	Light SW (D2)
A50	A23	Fuse Headlamp	Light SW (D1)
A52	A2	Fuse Headlamp (LH)	Headlamp LH
A51	A6	Fuse Headlamp (RH)	Headlamp RH
	A10	A51 - A6	Meter, high beam indicator
A3	A17	Headlamp LH (Hi)	Dimmer SW (HM)
	A7	A3 - A19	Headlamp RH (Hi)
	A11	A3 - A17	Meter high beam indicator
A4	A18	Headlamp LH (Lo)	Dimmer SW (Hs)
	A8	A8 - A18	Headlamp RH (Lo)
A8	A18	Headlamp RH (Lo)	Dimmer SW (Hs)
	A40	A8 - A18	Dim-Dip relay (1)
	A44	A8 - A18	Dim-Dip resister (RH)
A4	A41	Headlamp LH (Lo)	Dim-Dip relay (5)
	A45	A4 - A41	Dim-Dip resister (LH)
A42	A46	Dim-Dip relay (2)	Dim-Dip resister (–)
	A39	A50 - A23	Dim-Dip relay (8)
	A43	A3 - A17	Dim-Dip relay (9)
C87	C3	Fuse, tail	Side lamp SW (TB)
C13	C7	Side lamp SW (S)	Tail lamp RH (+)
	C10	C13 - C7	Clearance lamp RH (+)
	C12	C13 - C7	Clearance lamp LH (+)
	C16	C13 - C7	License lamp (+)
	C19	C13 - C7	Heater illumi. (+)
	C21	C13 - C7	Meter illumi. (+)
	C29	Q15 - Q16	Clock (+)
	C84	C13 - C7	Select SW illumi. (+)
	C85	C13 - C7	Hazard SW illumi. (+)
	C63	C13 - C7	Dim-Dip relay (6)
C37	C38	Light SW (RF)	RR. fog lamp SW (+)
C39	C40	RR fog lamp SW (–)	RR. fog lamp (+)
	C23	C13 - C7	FR. fog lamp SW (+)
C24	C25	FR fog lamp SW (–)	FR. fog RH (+)
	C26	C24 - C25	FR. fog LH (+)
	D41	Q15 - Q16	Luggage lamp (+)
	D2	Q15 - Q16	Room lamp (+)
D3	D7	Room lamp (–)	Courtesy SW LH

Terminal		Connection	
D3	D6	D3 - D7	Courtesy SW RH
E28	E10	Fuse, stop	Stop lamp SW (+)
E11	E14	Stop lamp SW (–)	Stop lamp RH (+)
E21	E19	Horn LH (–)	Horn SW (+)
	E3	E21 - E19	Horn RH (+)
E27	F23	Fuse, horn	Hazard SW (B2)
	E2	E27 - F23	Horn RH (+)
	E20	E27 - F23	Horn LH (+)
F1	F2	Hazard SW (R)	Meter, red hazard
F34	F24	Fuse, turn	Hazard SW (B1)
F26	F38	Flusher relay (B)	Hazard SW (F1)
F27	F35	Flusher relay (L)	Hazard SW (TB)
	F32	F27 - F35	Turn SW (+)
F29	F9	Turn SW (L)	FR. turn lamp LH (+)
	F5	F29 - F9	RR. turn lamp LH (+)
	F11	F29 - F9	Side turn lamp LH (+)
	F19	F29 - F9	Meter turn indicator, LH
	F37	F29 - F9	Hazard SW (TL)
F30	F14	Turn SW (R)	FR. turn lamp RH (+)
	F7	F30 - F14	RR. turn lamp RH (+)
	F16	F30 - F14	Side turn lamp RH (+)
	F21	F30 - F14	Meter turn indicator RH
	F36	F30 - F14	Hazard SW (TR)
	F12	Z137 - Z28	Side turn lamp LH (–)
	F17	Z130 - Z27	Side turn lamp RH (–)
	F28	Z302 - Z126	Flusher relay (E)
G3	G4	Back lamp SW (–)	Back lamp RH (+)
G6	G7	Meter, brake fluid	Parking brake SW
	G8	G6 - G7	Brake fluid level SW
G9	G7	Meter, parking brake	Parking brake SW
	G12	H41 - H2	Volt meter (+)
	G13	H41 - H2	3 stage controller
H41	H2	Fuse, gauge	Meter IG (+)
	G2		Back lamp SW (+)
H5	H6	Meter, Oil pressure	Oil pressure SW
H20	H21	Meter, temp. gauge	Thermo. senda
H22	H23	Meter, fuel gauge	Fuel senda

WIRE, COWL (RHD) — (2)

Terminal		Connection	
H32	H33	Meter, 4WD indicator	4WD/Dif. lock SW (+)
	H34	Z130 - Z27	4WD/Dif. lock SW (–)
	H49	H32 - H33	Meter, dif. lock indicator
I55	I10	Fuse, wiper	FR. wiper SW (+)
	I2	I55 - I10	FR. washer motor (+)
	I22	I55 - I10	FR. wiper motor (+)
	I42	I55 - I10	INT. relay (B)
I3	I6	FR. washer motor (–)	FR. washer SW (+)
I8	I41	FR. wiper SW (INT)	INT. relay (INT)
I11	I18	FR. wiper SW (Lo)	FR. wiper motor (Lo)
I12	I20	FR. wiper SW (Hi)	FR. wiper motor (Hi)
I13	I39	FR. wiper SW (OFF)	INT. relay (WS)
I24	I40	FR. wiper motor (com)	INT. relay (WM)
	I28	I55 - I10	RR. washer SW (+)
I28	I31	RR. washer SW (+)	RR. wiper SW (+)
	I43	I55 - I10	RR. wiper motor (B)
I52	I50	RR. wiper SW (Wip)	RR. wiper motor (+1)
I53	I51	RR. wiper SW (S)	RR. wiper motor (S)
I54	I26	RR. washer SW (–)	RR. washer motor (+)
K8	K70	Heater SW (L)	Diode
	J19	O8 - O12	H/L cleaner motor (+)
J20	J21	H/L cleaner motor (–)	H/L cleaner relay (M)
	J22	A51 - A6	H/L cleaner relay (H/L)
	J23	I55 - I10	H/L cleaner relay (B)
	J24	I3 - I6	H/L cleaner relay (WM)
K71	K13	Diode	Heater relay
K98	K27	Fuse, defogger	Defogger SW (+)
K28	K29	Defogger SW (–)	RR. defogger (+)
	K43	C13 - C7	Defogger SW illumi. (+)
K1	K10	Fuse, heater	Heater relay (+)
K2	K11	Heater motor (+)	Heater relay (–)
K30	K4	Heater motor (–)	Heater SW (M)
	K3	K3 - K4	Heater resister (H)
K41	K42	Heater resister (H2)	Heater SW (M2)
K5	K6	Heater resister (M1)	Heater SW (M1)
	K7	Z4 - Z300	Heater resister (L)
	K12	H41 - H2	Heater relay (coil +)

Terminal		Connection	
K8	K13	Heater SW (L)	Heater relay (coil –)
K48	K108	RR. heater SW (+)	RR. heater relay (coil –)
K50	K106	RR. heater motor (+)	RR. heater relay (–)
	K40	K50 - K106	RR. heater SW (–)
	K105	K1 - K10	RR. heater relay (+)
	K107	H41 - H2	RR. heater relay (coil +)
O2	K58	Fusible link	A/C relay (+)
K2	K137	K2 - K11	Fuse, A/C
K136	K47	Fuse, A/C	A/C SW (+)
K99	K100	A/C SW (–)	A/C amp. (B)
	K11	K99 - K100	A/C sub. (G1)
	K101	N7 - N8	A/C amp. (C)
K16	K102	A/C sub.	A/C amp. (D)
K18	K103	A/C idle up VSV	A/C amp. (E)
K19	K104	A/C idle up VSV	A/C amp. (F)
	K17	K19 - K104	A/C pressure SW (1)
K109	K96	A/C sub. (E1)	A/C water temp. SW
	K110	H41 - M2	A/C sub. (F1)
K112	K113	A/C pressure SW	A/C sub. (H1)
K114	K115	A/C amp. (M)	A/C sub. (J1)
K116	K117	A/C amp. (L)	A/C sub. (K1)
K118	K119	A/C amp. (Q)	A/C sub. (L1)
K120	Z135	A/C amp. (P)	A/C SW (E)
K200	K201	A/V volume	A/C amp.
M1	M2	IG SW (ST)	Starter magnet
N1	N34	IG SW (IG)	Fuse
	N44	N1 - N34	Fuse, turn gauge
	N45	N1 - N34	Fuse, wiper defogger
	N5	N1 - N34	IG coil (IG +)
	N37	N1 - N34	Igniter (B)
	N39	N1 - N34	Condensor (+)
	N36	O8 - O12	Fuse heater
N7	N8	IG coil (–)	Distributor (+)
	N11	N7 - N8	Meter, IG (–)
N30	N5	IG SW (IG2)	IG coil (IG +)
	N37	N30 - N5	Ignitor (B)
	N38	N30 - N5	Fuse, EFI 2

WIRE, COWL (RHD) — (3)

Terminal		Connection	
N30	N39	N30 - N5	Condensor (+)
N33	O56	Fuse, EFI 2	EFI relay
O8	O12	Fusible link	IG SW (AM)
O8		Fusible link	O12
	O12	O8	IG SW (AM)
O42	O55	ECU (BATT)	Fuse, back up
	O59	O8 - O12	Fuse, tail-stop
	O60	O8 - O12	Fuse, lock-doorn
	O61	O4 - A22	Fuse, Horn
O19	O76	Alternator (IG)	Fuse, engine
O20	O21	Meter, CHG	Alternator
	O57	O19 - O76	Dim-Dip relay (7)
	O58	O4 - A22	Dim-Dip relay (4)
Z4	Z131	Body earth	Condensor (E)
P5	P6	Fuel pump relay (–)	Fuel pump (+)
P17	P69	Fuel pump relay (–)	Diode
P18	P70	ECU (FC)	Diode
Z4	Z300	Body earth	Body earth
Z302	Z126	Body earth	Fuel pump (E)
P80	P81	Controller (–)	ACT, FR-RH motor (–)
	P82	P80 - P81	ACT, FR-LH motor (–)
Q15	Q16	Fuse, doorn-lock	Lock SW (B)
Q5	Q18	Lock SW (lock)	Lock motor (lock)
Q3	Q19	Lock SW (unlock)	Lock motor (unlock)
R1	R36	IG SW (ACC)	Fuse, cigarette lighter
R15	R37	Cigarette lighter	Fuse, cigarette lighter
	S8	Z4 - Z300	Select SW (–)
	S2	V38 - V39	Select SW (N)
	S4	V44 - V45	Select SW (N)
	S6	V50 - V51	Select SW (S)
V38	V39	Controller (N)	ACT SW (N), FR. RH
	V40	V38 - V39	ACT SW (N), FR. LH
V44	V45	Controller (N)	ACT SW (H), FR. RH
	V46	V44 - V45	ACT SW (H), FR. LH
V50	V51	Controller (S)	ACT SW (S), FR. RH
	V52	V50 - V51	ACT SW (S), FR. LH
X1	X2	Meter, diagnosis	ECU (W)

Terminal		Connection	
X3	X4	Meter, read SW	ECU (SPD)
X9	X11	Idle up VSV	Diode
	X12	K8 - K70	Diode
	X15	K28 - K29	Diode
	X16	A52 - A2	Diode
X17	X18	Diode	ECU (ELS)
	X19	K16 - K102	ECU (A/C)
	X22	M1 - M2	ECU (STA)
X47	X50	Injector relay	Injector #1
Z3	Z301	Body earth	Body earth
	Z4	Body earth	Body earth
Z130	Z27	Body earth	Clearance RH (E)
Z137	Z126	Body earth	Fuel pump (E)
	Z2	Z3 - Z301	Dimmer SW (E)
	Z11	Z130 - Z27	Oil level SW (E)
	Z16	Z4 - Z300	H/L cleaner relay (E)
	Z21	Z4 - Z300	Heater SW (E)
Z14	Z8	Body earth	Meter earth
Z102	Z30	Body earth	Radio (E)
Z137	Z28	Body earth	Clearance LH (E)
	Z131	Body earth	Condensor (E)
	Z31	Z4 - Z300	Cigarette lighter (E)
	Z33	Z132 - Z28	A/C sub. (E)
	Z42	Z302 - Z126	Defogger SW (E)
	Z43	Z130 - Z21	RR. fog. SW (E)
	Z45	Z130 - Z27	Relay box (E)
	Z60	Z302 - Z126	Lock SW (E)
Z102	Z74	Body earth	Meter gauge (E)
Z14	Z83	Body earth	Meter speed sensor (E)
	Z80	Z130 - Z21	Dim-Dip relay (E)
	Z85	Z4 - Z300	RR. heater SW (E)
	Z127	Z4 - Z300	Select SW illumi. (E)
	Z128	Z302 - Z126	Hazard SW illumi. (E)
	Z132	Z130 - Z27	FR. fog RH (–)
Z14	Z133	Z137 - Z28	FR. fog. LH (–)
	Z134	Z302 - Z126	RR. body earth
	Z136	Z302 - Z126	A/C amp. (E)

WIRE, COWL (RHD) — (4)

Terminal		Connection	
Z130	Z21	Body earth	Heater SW
	A61	A52 - A2	H/L leveling LH (+)
	A54	A51 - A6	H/L leveling RH (+)
A56	A63	H/L leveling RH (0)	H/L leveling LH (0)
	A69	A56 - A63	H/L leveling SW (0)
A57	A64	H/L leveling RH (1)	H/L leveling LH (1)
	A70	A59 - A64	H/L leveling SW (1)
A58	A65	H/L leveling RH (2)	H/L leveling LH (2)
	A71	A58 - A65	H/L leveling SW (2)
A59	A66	H/L leveling RH (3)	H/L leveling LH (3)
	A72	A59 - A66	H/L leveling SW (3)
A60	A67	H/L leveling RH (4)	H/L leveling LH (4)
	A73	A60 - A67	H/L leveling SW (4)
	A55	Z130 - Z27	H/L leveling RH (E)
	A62	Z137 - Z28	H/L leveling LH (E)
	A68	Z3 - Z4	H/L leveling SW (E)
	P20	N1 - N34	Power window C/B (+)
P21	P22	Power window C/B (–)	P/W master SW (+)
	P31	P21 - P22	P/W passenger (+)
P27	P29	P/W master SW (P) up	P/W SW (P) up
P28	P30	P/W master SW (P) down	P/W SW (P) down
Q2	Q33	Door lock relay (unlock)	Door lock SW (unlock)
Q4	Q35	Door lock relay (lock)	Door lock SW (lock)
Q6	Q7	Door lock relay (lock)	Motor (lock)
Q8	Q9	Door lock relay (unlock)	Motor (unlock)
	Q1	Q8	Door lock relay (+)
R18	R22	Door mirror SW (VL)	Door mirror (VL +)
R19	R24	Door mirror SW (VR)	Door mirror (VR +)
R20	R23	Door mirror SW (HL)	Door mirror (HL +)
R21	R25	Door mirror SW (HR)	Door mirror (HR +)
R17	R27	Door mirror SW (M)	Door mirror (LH –)
	R26	R17 - R27	Door mirror (RH –)
	R16	R15 - R37	Door mirror SW (+)
	Z59	Z302 - Z126	Door lock relay (E)
	Z61	Z3 - Z301	P/W SW (E)
	Z62	Z302 - Z126	Door mirror SW (E)
	Z65	Z3 - Z301	Door lock SW (E)

Terminal		Connection	
R28	R48	Rear speaker RH (+)	Radio (SP. RH +)
R29	R51	Rear speaker RH (–)	Radio (SP. RH –)
R30	R46	Rear speaker LH (+)	Radio (SP. RH +)
R30	R47	Rear speaker LH (–)	Radio (SP. RH –)

WFE90-HW051

WIRE, COWL (LHD) — (1)

Terminal		Connection	
O4	A22	Fusible link	Light SW (D2)
A50	A23	Fuse, headlamp	Light SW (D1)
A52	A2	Fuse, headlamp LH	Headlamp LH (B)
A51	A6	Fuse, headlamp RH	Headlamp RH (B)
	A10	A51 - A6	Meter, high beam indicator (+)
A3	A17	Headlamp LH (Hi)	Dimmer SW (HM)
	A7	A3 - A17	Headlamp RH (Hi)
	A11	A3 - A17	Meter, high beam indicator (–)
A4	A18	Headlamp LH (Lo)	Dimmer SW (Hs)
	A8	A4 - A18	Headlamp RH (Lo)
	A29	O4 - A22	Day light relay (2)
	A30	A50 - A23	Day light relay (3)
	A31	A4 - A18	Day light relay (6)
	A32	Z3 - Z301	Day light relay (7)
	A33	A3 - A17	Day light relay (10)
C87	C3	Fuse, tail	Side light SW (TB)
C13	C7	Side lamp SW (S)	Tail lamp RH (+)
	C10	C13 - C7	Clearance lamp RH (+)
	C12	C13 - C7	Clearance lamp LH (+)
	C16	C13 - C7	License lamp (+)
	C19	C13 - C7	Heater illumi. (+)
	C21	C13 - C7	Meter illumi. (+)
	C29	Q15 - Q16	Clock (+)
	C84	C13 - C7	Select SW illumi. (+)
	C85	C13 - C7	Hazard SW illumi. (+)
C37	C38	Light SW (RF)	RR. fog SW (+)
C39	C40	RR. fog SW (–)	RR. fog lamp (+)
	C23	C13 - C7	FR. fog SW (+)
C24	C25	FR. fog SW (–)	FR. fog lamp RH (+)
	C26	C24 - C25	FR. fog lamp LH (+)
	C49	C87 - C3	Day light relay (4)
C92	C50	Tail SW	Day light relay (5)
C91	C51	Tail SW	Day light relay (8)
	C3	O8 - O12	Side lamp SW (TB)
C13	C86	Side lamp SW (S)	Fuse, tail
C88	C10	Fuse, tail RH	Clearance lamp RH (+)
	C7	C88 - C10	Tail lamp RH (+)

Terminal		Connection	
C88	C19	C88 - C10	Heater illumi. (+)
	C21	C88 - C10	Meter illumi. (+)
	C84	C88 - C10	Select SW illumi. (+)
	C85	C88 - C10	Hazard SW illumi. (+)
C89	C12	Fuse, tail LH	Clearance lamp LH (+)
	C16	C89 - C12	License lamp (+)
	C48	C89 - C12	Light SW (DM)
	D2	Q15 - Q16	Room lamp (+)
D3	D7	Room lamp (–)	Courtesy SW LH
	D6	D3 - D7	Courtesy SW RH
	D41	Q15 - Q16	Luggage lamp (+)
E28	E10	Fuse, stop	Stop lamp SW (+)
E11	E14	Stop lamp SW (–)	Stop lamp RH (+)
E21	E19	Horn LH (–)	Horn SW (+)
	E3	E21 - E19	Horn RH (–)
E27	F23	Fuse, horn	Hazard SW (B2)
	E2	E27 - F23	Horn RH (+)
	E20	E27 - F23	Horn LH (+)
F1	F2	Hazard SW (R)	Red hazard lamp (+)
F34	F24	Fuse, turn	Hazard SW
F26	F38	Flusher relay (B)	Hazard SW (F1)
F27	F35	Flusher relay (L)	Hazard SW (TB)
	F32	E27 - F35	Turn SW (+)
F29	F9	Turn SW (L)	FR. turn lamp LH (+)
	F5	F29 - F9	RR. turn lamp LH (+)
	F11	F29 - F9	Side turn lamp LH (+)
	F19	F29 - F9	Meter turn indicator LH (+)
	F37	F29 - F9	Hazard SW (TL)
F30	F14	Turn SW (R)	FR. turn lamp RH (+)
	F7	F30 - F14	RR. turn lamp RH (+)
	F16	F30 - F14	Side turn lamp RH (+)
	F21	F30 - F14	Meter turn indicator RH (+)
	F36	F30 - F14	Hazard SW (TR)
	F12	Z139 - Z28	Side turn lamp LH (–)
	F17	Z130 - Z27	Side turn lamp RH (–)
	F28	Z8 - Z301	Flusher relay (E)
	G2	H41 - H2	Back up lamp SW (+)

WIRE, COWL (LHD) — (2)

Terminal		Connection	
G3	G4	Back up lamp SW (–)	Back up lamp RH (+)
G6	G7	Meter brake fluid	Parking brake SW (+)
	G8	G6 - G7	Brake fluid level SW (+)
G6	G8	Meter brake fluid	Brake fluid level SW (+)
G9	G7	Meter, parking brake	Parking brake SW (+)
	G12	H41 - H2	Volt meter (+)
	G13	H41 - H2	3 stage controller (+)
	H49	H32 - M33	Meter, dif. lock indicator
H41	H2	Fuse, gauge	Meter, IG (+)
H5	H6	Meter, oil pressure	Oil pressure SW
H18	H19	Meter, seat belt warning	Seat belt SW
H20	H21	Mete, temp. gauge	Thermo. sender
H22	H23	Meter, fuel gauge	Fuel sender
H32	H33	Meter, 4WD indicator	4WD/Dif. lock SW (+)
	H34	Z130 - Z27	4WD/Dif. lock SW (–)
I55	I10	Fuse, wiper	FR. wiper SW (+)
	I2	I55 - I10	FR. washer motor (+)
	I22	I55 - I10	FR. wiper motor (+)
	I42	I55 - I10	INT relay (B)
I3	I6	FR. washer motor (+)	FR. washer SW (+)
I8	I41	FR. wiper SW (INT)	INT relay (INT)
I11	I18	FR. wiper SW (Lo)	FR. wiper motor (Lo)
I12	I20	FR. wiper SW (Hi)	FR. wiper motor (Hi)
I13	I39	FR. wiper SW (OFF)	INT relay
I24	I40	FR. wiper motor (comm)	INT relay
I31	I28	FR. wiper SW (+)	RR. washer SW (+)
	I31	I55 - I10	RR. wiper SW (+)
	I43	I55 - I10	RR. wiper motor (B)
I55	I50	RR. wiper SW (wip)	RR. wiper motor (+1)
I53	I51	RR. wiper SW (S)	RR. wiper motor (S)
I54	I26	RR. washer SW (–)	RR. washer motor (+)
	J19	O8 - O12	H/L cleaner motor (+)
J20	J21	H/L cleaner motor (–)	H/L cleaner relay
	J22	A51 - A6	H/L cleaner relay (H/L)
	J23	I55 - I10	H/L cleaner relay
	J24	I3 - I6	H/L cleaner relay
K98	K27	Fuse, defogger	Defogger SW (+)

Terminal		Connection	
K28	J29	Defogger SW (–)	RR. defogger (+)
	K43	C13 - C7 (C88 - C10)	Defogger SW illumi. (+)
K1	K10	Fuse, heater	Heater relay (+)
K2	K11	Heater motor (+)	Heater relay (–)
K30	K4	Heater motor (–)	Heater SW
	K3	K30 - K4	Heater resister
K41	K42	Heater resister (H2)	Heater SW (H2)
K5	K6	Heater resister (H1)	Heater SW (H1)
	K7	Z3 - Z301	Heater resister (L)
	K12	H41 - H2	Heater relay (coil +)
K8	K13	Heater SW (L)	Heater relay (coil –)
	K105	K1 - K10	RR. heater relay (+)
	K107	H41 - H2	RR. heater relay (coil +)
K48	K108	RR. heater SW (+)	RR. heater relay (coil –)
K50	K106	RR. heater motor (+)	RR. heater (–)
	K49	K50 - K106	RR. heater SW (–)
O2	K58	F/L, A/C	A/C sub.
K136	K47	Fuse, A/C	A/C SW (+)
K99	K100	A/C SW (–)	A/C amp. (B)
	K111	K99 - K100	A/C sub.
	K101	N7 - N8	A/C amp.
K16	K102	A/C sub.	A/C amp.
K18	K103	A/C idle up VSV	A/C amp.
K19	K104	A/C idle up VSV	A/C amp.
	K17	K19 - K104	A/C pressure SW
K109	K96	A/C sub.	A/C water temp. SW
	K110	H41 - H2	A/C sub.
K112	K113	A/C pressure SW	A/C sub.
K114	K115	A/C amp.	A/C sub.
K116	K117	A/C amp.	A/C sub.
K118	K119	A/C amp.	A/C sub.
K120	Z135	A/C amp.	A/C SW
	K137	K2 - K11	Fuse A/C
K220	K201	A/C volume	A/C amp.
M1	M2	IG SW (ST)	Starter magnet
	M9	M1 - M2	Day light relay
N1	N37	IG SW (IG)	Igniter (B)

WIRE, COWL (LHD) — (3)

Terminal		Connection	
N1	N5	N1 - N37	IG coil (IG +)
	N34	N1 - N37	Fuse, engine
	N39	N1 - N37	Condenser (+)
	N44	N1 - N37	Fuse, turn-gauge
	N45	N1 - N37	Fuse, wiper-defogger
N7	N8	IG coil (–)	Distributor (+)
	N11	N7 - N8	Meter IG (–)
	N36	O8 - O12	Fuse, heater
O8		F/L	- O12
	O12	O8 -	IG SW
	O59	O8 -	Fuse, tail-stop
	O60	O8 -	Fuse, doom-lock
O19	O76	Alternator (IG)	Fuse, engine
	O51	O19 - O76	Day light relay
O20	O21	Meter, CHG	Alternator (L)
	O52	O20 - O21	Day light relay
	O61	O4 - A22	Fuse, horn
P80	P81	Controller (–)	ACT FR. RH (motor)
	P82	P80 - P81	ACT FR. LH (motor)
Q25	W16	Fuse, doom-lock	Back door lock SW
Q5	Q18	Door lock SW (lock)	Back door motor (lock)
Q3	Q19	Door lock SW (unlock)	Back door motor (unlock)
R1	R36	IG SW (ACC)	Fuse, cigarette lighter
R15	R37	Cigarette lighter (+)	Fuse, cigarette lighter
	S2	V38 - V39	Select SW (N)
	S4	V44 - V45	Select SW (H)
	S6	V50 - V51	Select SW (S)
	S8	Z4 - Z21	Select SW (–)
V38	V39	Controller (N)	ACT SW (N) FR. RH
	V40	V38 - V39	ACT SW (N) FR. LH
V44	V45	Controller (H)	ACT SW (H) FR. RH
	V46	V44 - V45	ACT SW (H) FR. LH
V50	V51	Controller (S)	ACT SW (S) FR. RH
	V52	V50 - V51	ACT SW (S) FR. LH
Z3	Z301	Body earth	Body earth
Z130	Z27	Body earth	Clearance RH (E)
Z301	Z126	Body earth	Fuel pump

Terminal		Connection	
Z301	Z2	Z4 - Z21	Dimmer SW (E)
	Z8	Z3 - Z301	Meter, earth
	Z11	Z137 - Z28	Oil level SW (E)
	Z16	Z3 - Z201	H/L cleaner relay (E)
Z4	Z21	Body earth	Heater SW (E)
Z103	Z30	Body earth	Radio (E)
Z15	Z8	Body earth	Meter (E)
Z103	Z129	Body earth	Meter, gauge earth
	Z31	Z4 - Z21	Cigarette lighter (E)
	Z33	Z137 - Z28	A/C sub. (earth)
	Z42	Z3 - Z301	Defogger SW (E)
	Z43	Z4 - Z21	RR. fog SW (E)
	Z60	Z302 - Z126	Lock SW
Z103	Z74	Body earth	Meter, gauge (E)
Z15	Z83	Body earth	Meter, speed sensor (E)
Z137	Z28	Body earth	Clearance LH (E)
	Z131	Body earth	Condenser (E)
	Z40	Z302 - Z126	Seat belt SW (E)
	Z85	Z4 - Z21	RR. heater SW (E)
	Z127	Z4 - Z21	Select SW illumi. (–)
	Z128	Z3 - Z301	Hazard SW illumi. (–)
	Z132	Z137 - Z27	FR. fog lamp RH (–)
	Z133	V139 - Z28	FR. fog lamp LH (–)
	Z134	Z302 - Z126	RR. body earth
	Z65	Z302 - Z126	Door lock SW (E)
	Z136	Z3 - Z301	A/C amp. (E)
Z15	Z74	Body earth	Meter, gauge (E)
	Z59	Z3 - Z301	Door lock relay (E)
	Z61	Z302 - Z126	P/W SW (E)
	Z62	Z302 - Z126	Door mirror SW (E)
	Z300	Z4 - Z21	Body earth
	P20	N1 - N37	Power window C/B (+)
P21	P22	Power window C/B (–)	P/W master SW (+)
	P31	P21 - P22	P/W passenger (+)
P27	P29	P/W master SW (P) up	P/W SW (P) up
P28	P30	P/W master SW (P) down	P/W SW (P) down
Q2	Q33	Door lock relay	Door lock SW (unlock)

WIRE, COWL (LHD) — (4)

Terminal		Connection	
Q4	Q35	Door lock relay	Door lock (lock)
Q6	Q7	Door lock relay	Motor (FR-P-lock)
Q8	Q9	Door lock relay	Motor (FR-P-unlock)
	Q1	O8 -	Door lock relay (+)
R18	R22	Door mirror SW (VL)	Door mirror (VL +)
R19	R24	Door mirror SW (VR)	Door mirror (VR +)
R20	R23	Door mirror SW (HL)	Door mirror (HL +)
R21	R25	Door mirror SW (HR)	Door mirror (HR +)
R17	R27	Door mirror SW (motor)	Door mirror (LH –)
	R26	R17 - R27	Door mirror (RH –)
	R16	R15 - R37	Door mirror SW (+)

WFE90-HW052

WIRE, COWL (German Spec.) — (1)

Terminal		Connection	
O4	A22	Fusible link	Light SW (D2)
A50	A23	Fuse, H/L	Light SW (DL)
A52	A2	Fuse, H/L LH	H/L LH (B)
A51	A6	Fuse, H/L RH	H/L RH (B)
	A10	A51 - A6	High beam indicator (+)
A3	A17	H/L LH (Hi)	Dimmer SW (HM)
	A7	A3 - A17	H/L RH (Hi)
	A11	A3 - A17	High beam indicator (–)
A4	A18	H/L LH (Lo)	Dimmer SW (HS)
	A8	A4 - A18	H/L RH (Lo)
	A29	O4 - A22	Day light relay
	A30	A50 - A23	Day light relay
	A31	A4 - A18	Day light relay
	A32	Z3 - Z301	Day light relay
	A33	A3 - A17	Day light relay
C87	C3	Fuse, tail	Side lamp SW (TB)
C13	C7	Side lamp SW (S)	Tail lamp RH (+)
	C10	C13 - C7	Clearance lamp RH (+)
	C12	C13 - C7	Clearance lamp LH (+)
	C16	C13 - C7	License lamp (+)
	C19	C13 - C7	Heater illumi. (+)
	C21	C13 - C7	Meter illumi. (+)
	C29	Q15 - Q16	Clock (+)
	C84	C13 - C7	Select SW illumi. (+)
	C85	C13 - C7	Hazard SW illumi. (+)
C37	C38	Lighting SW (RF)	Rear fog SW (+)
C39	C40	Rear fog SW (–)	Rear fog (+)
	C49	C87 - C3	Day light relay (4)
C92	C50	Tail SW (5)	Day light relay (5)
C91	C51	Tail SW (8)	Day light relay (8)
	C3	O8 - O12	Side lamp SW (TB)
C13	C86	Side lamp SW (S)	Fuse, tail
C88	C10	Fuse, tail RH	Clearance lamp RH (+)
	C7	C88 - C10	Tail lamp RH (+)
	C19	C88 - C10	Heater illumi. (+)
	C21	C88 - C10	Meter illumi. (+)
	C84	C88 - C10	Select SW illumi. (+)

Terminal		Connection	
C88	C85	C88 - C10	Hazard SW illumi. (+)
C89	C12	Fuse, tail LH	Clearance lamp LH (+)
	C16	C89 - C12	License lamp (+)
	C48	C89 - C12	Lighting SW (DM)
	D2	Q15 - Q16	Room lamp (+)
D3	D7	Room lamp (–)	Courtesy SW LH
	D6	D3 - D7	Courtesy SW RH
	D41	Q15 - Q16	Luggage lamp (+)
E28	E10	Fuse, stop	Stop lamp SW (+)
E11	E14	Stop lamp SW (–)	Stop lamp RH (+)
E21	E19	Horn LH (–)	Horn SW (+)
	E3	E21 - E19	Horn RH (–)
E27	F23	Fuse, horn	Hazard SW
	E2	E27 - F23	Horn RH (+)
	E20	E27 - F23	Horn LH (+)
F1	F2	Hazard SW (R)	Meter, red hazard (+)
F34	F24	Fuse, turn	Hazard SW (B1)
F26	F38	Flusher relay (B)	Hazard SW (F)
F27	F35	Flusher relay (L)	Hazard SW (TB)
	F32	F27 - F35	Turn SW (+)
F29	F9	Turn SW (L)	Fr. turn lamp LH (+)
	F5	F29 - F9	Rr. turn lamp LH (+)
	F11	F29 - F9	Side turn lamp LH (+)
	F19	F29 - F9	Meter, turn indicator LH (+)
	F37	F29 - F9	Hazard SW (TL)
F30	F14	Turn SW (R)	Fr. turn lamp RH (+)
	F7	F30 - F14	Rr. turn lamp RH (+)
	F16	F30 - F14	Side turn lamp RH (+)
	F21	F30 - F14	Meter, turn indicator RH (+)
	F36	F30 - F14	Hazard SW (TR)
	F12	Z137 - Z28	Side turn lamp LH (–)
	F17	Z130 - Z27	Side turn lamp RH (–)
	F28	Z3 - Z301	Flusher relay (E)
	H49	H32 - H33	Meter, diff. lock
	G2	H41 - H2	Back lamp SW (+)
G3	G4	Back lamp SW (–)	Back lamp RH (+)
G6	G8	Meter, brake fluid	Brake fluid level SW (+)

WIRE, COWL (German Spec.) — (2)

Terminal		Connection	
G9	G7	Meter, parking brake	Parking brake SW (+)
	G12	H41 - H2	Volt meter
	G13	H41 - H2	3 stage controller
H41	H2	Fuse, gauge	Meter IG (+)
H5	H6	Meter, oil pressure	Oil pressure SW
H20	H21	Meter, temp. gauge	Thermo. sender
H22	H23	Meter, fuel gauge	Fuel sender
H32	H33	Meter, 4WD indicator	4WD/Diff. lock SW (+)
	H34	Z130 - Z27	4WD/Diff. lock SW (–)
I55	I10	Fuse, wiper	Fr. wiper SW (+)
	I2	I55 - I10	Fr. washer motor (+)
	I22	I55 - I10	Fr. wiper motor (+)
	I42	I55 - I10	INT relay (B)
I3	I6	Fr. washer motor (–)	Fr. washer SW (+)
I8	I41	Fr. wiper SW (INT)	INT relay (INT)
I11	I18	Fr. wiper SW (Lo)	Fr. wiper motor (Lo)
I12	I20	Fr. wiper SW (Hi)	Fr. wiper motor (Hi)
I13	I39	Fr. wiper SW (Off)	INT relay (WS)
I24	I40	Fr. wiper motor (Comm)	INT relay (WH)
	I28	I55 - I10	Rr. washer SW (+)
	I31	I55 - I10	Rr. wiper SW (+)
	I43	I55 - I10	Rr. wiper motor (B)
I52	I50	Rr. wiper SW (WIP)	Rr. wiper motor (+1)
I53	I51	Rr. wiper SW (S)	Rr. wiper motor (+)
I54	I26	Rr. washer SW (–)	Rr. washer motor (+)
	J19	O8 - O12	H/L cleaner motor (+)
J20	J21	H/L cleaner motor (–)	H/L cleaner relay (M)
	J22	A51 - A6	H/L cleaner relay (HL)
	J23	I55 - I10	H/L cleaner relay (B)
	J24	I3 - I6	H/L cleaner relay (INT)
K98	K27	Fuse, defogger	Defogger SW (+)
	K43	C13 - C7	Defogger SW illum. (+)
	K43	C88 - C10	Defogger SW illum. (+)
K1	K10	Fuse, heater	Heater relay (+)
K2	K11	Heater motor (+)	Heater relay (–)
K30	K4	Heater motor (–)	Heater SW (M)
	K3	K30 - K4	Heater resister (M)

Terminal		Connection	
K41	K42	Heater resister (M2)	Heater SW (M2)
K5	K6	Heater resister (M1)	Heater SW (M1)
	K7	Z3 - Z301	Heater resister (L)
	K12	H41 - H2	Heater relay coil (+)
K8	K13	Heater SW (Lo)	Heater relay coil (–)
	K107	H41 - H2	Rr. heater relay coil (+)
K48	K108	Rr. heater SW (+)	Rr. heater relay coil (–)
K50	K106	Rr. heater motor (+)	Rr. heater relay (–)
	K49	K50 - K106	Rr. heater SW (–)
	K105	K1 - K10	Rr. heater relay (+)
K8	K70	Heater SW (Lo)	Diode (–)
K71	K13	Diode (+)	Heater relay coil (–)
	K137	K2 - K11	Fuse, A/C
K19	K104	A/C, idle up VSV (–)	A/C, amp. (F)
		K19 - K104	A/C, pressure SW (1)
K136	K47	Fuse, A/C	A/C, SW (+)
K99	K100	A/C, SW (–)	A/C, amp. (B)
	K101	N7 - N8	A/C, amp. (C)
K16	K102	A/C, magnet clutch	A/C, amp. (D)
K18	K103	A/C, idle up VSV (+)	A/C, amp. (E)
K19	K104	A/C, idle up VSV (–)	A/C, amp. (F)
K120	Z135	A/C, amp. P	A/C, SW (–)
K109	K96	A/C, sub. E	Wat temp. SW (A/C)
	K110	H41 - H2	A/C, sub. F1
	K111	K99 - K100	A/C, sub. G1
K112	K113	A/C, pressure SW (2)	A/C, sub. M1
K114	K115	A/C, amp. M	A/C, sub. J1
K116	K117	A/C, amp. L	A/C, sub. K1
K118	K119	A/C, amp. Q	A/C, sub. L1
M1	M2	IG SW (ST)	Starter magnet
	M9	M1 - M2	Day light relay
	N36	Q8 - O12	Fuse, heater
N1	N34	IG SW (IG1)	Fuse, engine
	N44	N1 - N34	Fuse, turn gauge
	N45	N1 - N34	Fuse, wiper defogger
N7	N8	IG coil (–)	Distributor (+)
	N11	N7 - N8	Meter IG (–)

WIRE, COWL (German Spec.) — (3)

Terminal		Connection	
N30		IG SW (IG2)	- N37
	N37	N30 -	Igniter (B)
	N5	- N37	IG coil (IG +)
	N38	- N37	Fuse, EFI 2
	N39	- N5	Condenser (+)
N33	O56	Fuse, EFI 2	EFI relay coil (+)
O8		Fusible link	- O12
	O12	O8 -	IG SW (AM)
	O59	O8 -	Fuse, tail stop
	O60	O8 -	Fuse, doom lock
O19	O76	Alternator (IG)	Fuse, engine
	O51	O19 - O76	Day light relay (1)
O2	K58	Fusible link	A/C relay (+)
O20	O21	Meter, CHG	Alternator (L)
	O52	O20 - O21	Day light relay (9)
O42	O55	ECU (BATT)	Fuse, back-up
	O61	O4 - A22	Fuse, horn
P5	P6	Fuel pump relay (–)	Fuel pump (+)
P17	P69	Fuel pump relay coil (–)	Diode
P18	P70	ECU (FC)	Diode
P17	P18	Fuel pump relay coil (–)	ECU (FC)
P80	P81	Controller (–)	ACT Fr. RH motor (–)
	P82	P89 - P82	ACT Fr. LH motor (–)
Q15	Q16	Fuse, doom lock	Lock SW (B)
Q5	Q18	Lock SW (lock)	Motor (lock)
Q3	Q19	Lock SW (unlock)	Motor (unlock)
R1	R36	IG SW (ACC)	Fuse, cigarette lighter
R15	R37	Cigarette lighter	Fuse, cigarette lighter
	S2	V38 - V39	Select SW (N)
	S4	V44 - V45	Select SW (H)
	S6	V50 - V51	Select SW (S)
	S8	Z4 - Z21	Select SW (–)
V38	V39	Controller (N)	ACT SW (N) Fr. RH
	V40	V38 - V39	ACT SW (N) Fr. LH
V44	V45	Controller (H)	ACT SW (H) Fr. RH
	V46	V44 - V45	ACT SW (H) Fr. LH
V50	V51	Controller (S)	ACT SW (S) Fr. RH

Terminal		Connection	
V50	V52	V50 - V51	ACT SW (S) Fr. LH
X1	X2	Meter, diagnosis	ECU (W)
X3	X4	Meter, reed SW	ECU (SPD)
X9	X11	Idle up VSV	Diode
	X12	K8 - K70	Diode
	X15	K28 - K29	Diode
	X16	A52 - A2	Diode
X17	X18	Diode	ECU (ELS)
	X12	K8 - K13	Diode
	X22	M1 - M2	ECU (STA)
X47	X50	Injector relay	Injector #1
	X92	E11 - E14	ECU (B/K)
Z3	Z301	Body earth	Body earth
	Z33	Z3 - Z4	A/C, fan motor (–)
	Z136	Z3 - Z4	A/C, amp. (–)
X130	Z27	Body earth	Clearance RH (–)
Z302	Z126	Body earth	Fuel pump (–)
	Z2	Z4 - Z21	Dimmer SW (E)
	Z11	Z137 - Z28	Oil level SW (E)
	Z16	Z3 - Z301	H/L cleaner relay (E)
Z4	Z21	Body earth	Heater SW (E)
Z103	Z30	Body earth	Radio (E)
Z15	Z8	Body earth	Meter (E)
	Z31	Z4 - Z21	Cigarette lighter (E)
	Z42	Z3 - Z301	Defogger SW (E)
	Z43	Z4 - Z21	Rear fog SW (E)
	Z45	Z130 - Z27	Relay Box (E)
	Z60	Z302- Z126	Lock SW (E)
Z103	Z74	Body earth	Gauge earth
Z15	Z83	Body earth	Meter, speed sensor (–)
Z137	Z28	Body earth	Condenser (E)
Z137	Z131	Body earth	Condenser (E)
	Z85	Z4 - Z21	Rear heater SW (E)
	Z127	Z4 - Z21	Select SW illum. (–)
	Z128	Z3 - Z301	Hazard SW illum. (–)
	Z134	Z302 - Z126	Rr. body earth
	Z300	Z4 - Z21	Body earth

WIRE, COWL (German Spec.) — (4)

Terminal		Connection	
Z137	P20	N1 - N34	Power window (+)
P21	P22	Power window (–)	P/W master SW (+)
	P31	P21 - P22	P/W passenger (+)
P27	P29	P/W master SW (P) up	P/W SW (P) up
P28	P30	P/W master SW (P) down	P/W SW (P) down
Q2	Q33	Door lock relay (unlock)	Door lock SW (unlock)
Q4	Q3	Door lock relay (lock)	Door lock SW (lock)
Q6	Q7	Door lock relay (motor)	Motor Fr. P (lock)
Q8	Q9	Door lock relay (motor)	Motor Fr. P (unlock)
Q8	Q1	Q8 -	Door lock relay (+)
R18	R22	Door mirror SW (VL)	Door mirror (VL +)
R19	R24	Door mirror SW (VR)	Door mirror (VR +)
R20	R23	Door mirror SW (HL)	Door mirror (HL +)
R21	R25	Door mirror SW (HR)	Door mirror (HR +)
R17	R27	Door mirror SW (M)	Door mirror (LH –)
	R26	R17 - R27	Door mirror (RH –)
	R16	R15 - R37	Door mirror SW (+)
	Z65	Z302 - Z126	Door control SW (E)
	Z59	Z3 - Z301	Door lock relay (E)
	Z61	Z302 - Z126	P/W SW (E)
	Z62	Z302 - Z126	Door mirror SW (E)
	A61	A52 - A2	H/L leveling LH (+)
	A54	A51 - A6	H/L leveling RH (+)
A56	A63	H/L leveling RH (0)	H/L leveling LH (0)
	A69	A56 - A63	H/L leveling SW (0)
A57	A64	H/L leveling RH (1)	H/L leveling LH (1)
	A70	A57 - A64	H/L leveling SW (1)
A58	A65	H/L leveling RH (2)	H/L leveling LH (2)
	A71	A58 - A65	H/L leveling SW (2)
A59	A66	H/L leveling RH (3)	H/L leveling LH (3)
	A72	A59 - A66	H/L leveling SW (3)
A60	A67	H/L leveling RH (4)	H/L leveling LH (4)
	A73	A60 - A67	H/L leveling SW (4)
	A55	Z130 - Z27	H/L leveling RH (E)
	A62	Z137 - Z28	H/L leveling LH (E)
	A68	Z4 - Z21	H/L leveling SW (E)
R28	R48	Rear speaker RH (+)	Radio (SP. RH +)

Terminal		Connection	
R29	R51	Rear speaker RH (–)	Radio (SP. RH –)
R30	R46	Rear speaker LH (+)	Radio (SP. LH +)
R31	R47	Rear speaker LH (–)	Radio (SP. LH –)

WFE90-HW053

WIRE FLOOR

Terminal		Connection	
C13	C7	Turn signal SW (S)	Tail RH (+) (Body)
C13	C6	Turn signal SW (S)	Tail RH (+) (Bumper)
C89	C16	Turn signal SW (S)	Licence lamp (+)
	C8	C89 - C16	Tail LH (+) (Body)
	C9	C89 - C16	Tail LH (+) (Bumper)
C39	C40	Rear fog SW (–)	Rear fog lamp (+)
	C83	C39 - C40	Rear fog lamp (+)
D3	D7	Doom lamp SW (–)	Door courtesy SW LH (+)
D40	D41	Fuse, doom-lock	Luggage lamp (+)
D42	D43	Luggage lamp (door)	Courtesy SW (Back door)
E11	E17	Stop lamp SW (–)	Stop lamp LH (+)/Bumper
E11	E14	Stop lamp SW (–)	Stop lamp RH (+)/Body
	E15	E11 - E14	Stop lamp LH (+)/Body
	E16	E11 - E17	Stop lamp RH (+)/Bumper
F29	F5	Turn signal SW (L)	Turn lamp LH (+)/Body
F29	F6	Turn signal SW (L)	Turn lamp LH (+)/Bumper
F30	F7	Turn signal SW (R)	Turn lamp RH (+)/Body
F30	F8	Turn signal SW (R)	Turn lamp RH (+)/Bumper
G3	G5	Back up lamp SW (–)	Back up lamp LH (+)
	G4	G3 - G5	Back up lamp RH (+)
H22	H23	Meter, fuel gauge	Fuel sender
H41	G13	Fuse, gauge	3 stage controller (+)
I55	I29	Fuse, wiper	Rear wiper motor (+)
I52	I50	Rear wiper SW (WIP)	Rear wiper motor (+)
I53	I51	Rear wiper SW (WIP)	Rear wiper motor (S)
I54	I26	Rear wiper SW (WAS)	Rear washer motor (B)
K28	K29	Defogger SW (–)	Defogger (+)
P80	P81	3 stage controller (–)	ACT, Fr . RH motor (–)
	P83	P80 - P81	ACT, Rr. RH motor (–)
Q5	Q18	Motor lock SW (lock)	Motor lock (lock)
Q3	Q19	Motor lock SW (unlock)	Motor lock (unlock)
R28	R48	Rear speaker RH (+)	Radio (Rr. SP. RH +)
R29	R51	Rear speaker RH (–)	Radio (Rr. SP. RH +)
R30	R46	Rear speaker LH (+)	Radio (Rr. SP. LH +)
R31	R47	Rear speaker LH (–)	Radio (Rr. SP. LH –)
V38	V39	3 stage controller (N)	ACT, Fr. RH (N)
	V41	V38 - V39	ACT, Rr. RH (N)

Terminal		Connection	
V44	V45	3 stage controller (H)	ACT, Fr. RH (H)
	V47	V44 - V45	ACT, Rr. RH (H)
V50	V51	3 stage controller (S)	ACT, Fr. RH (S)
	V53	V50 - V51	ACT, Rr. RH (S)
Z137	Z3	Body earth	Body earth
Z137	Z6	Body earth	Rear comb. LH (–)/Body
	Z123	Z137 - Z6	3 stage controller (–)
	Z141	Z137 - Z6	Luggage lamp (–)
	Z12	Z137 - Z6	Rear comb. LH (–)/Bumper
Z134	Z41	Body earth	Fuel sender (–)
Z134	Z122	Body earth	Body earth
	Z5	Z134 - Z122	Rear comb. RH (–)/Body
	Z77	Z134 - Z122	Rear fog lamp (–)
	Z125	Z134 - Z122	Rear fog lamp (–)
	Z11	Z134 - Z122	Rear comb. RH (–)/Bumper

WFE90-HW054

WIRING CLAMPING

Engine wire harness for HD-C engine

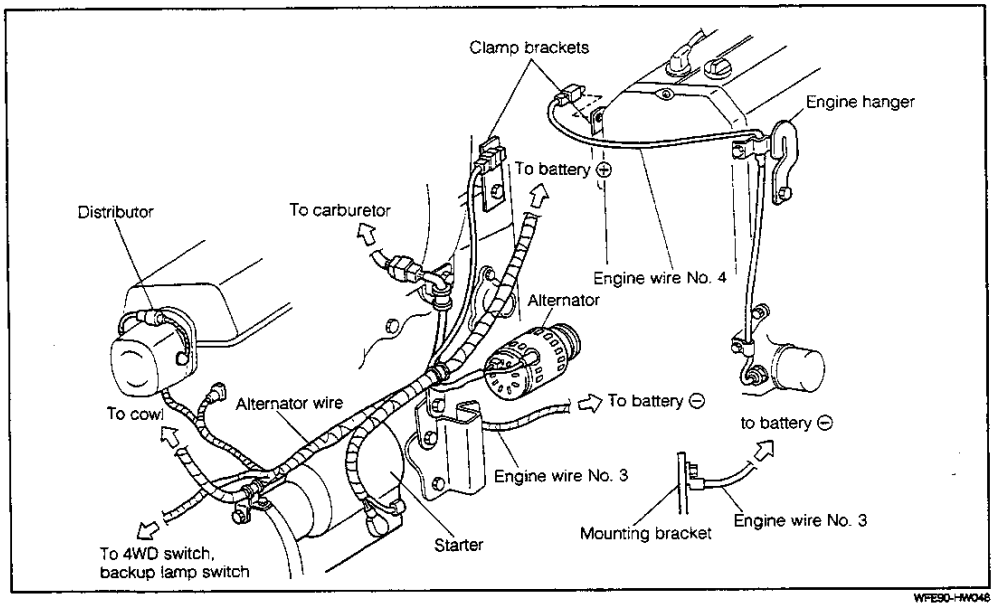

WFE90-HW048

Engine wire harness for HD-E engine

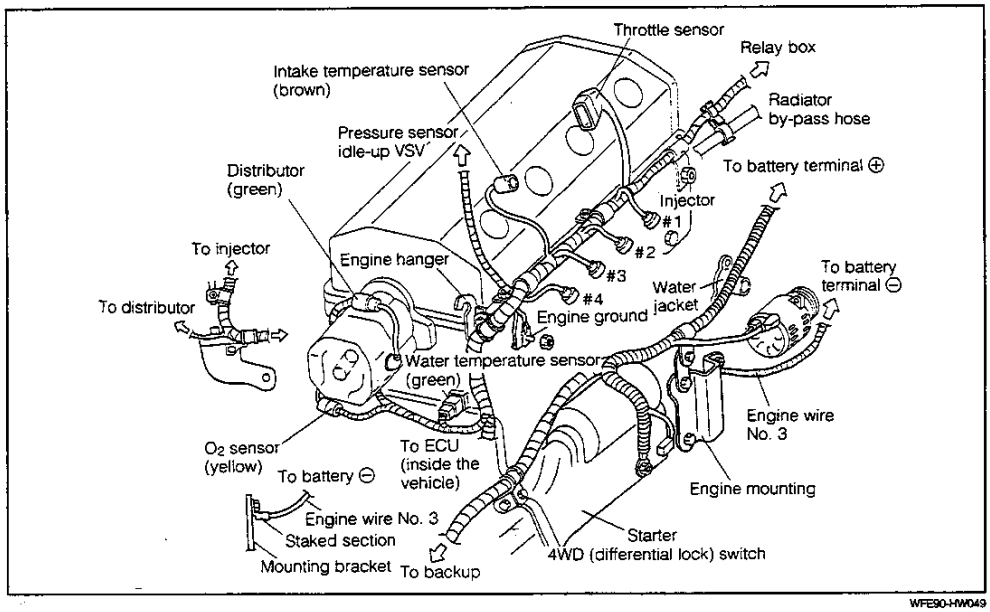

WFE90-HW049

Section: Harness leading to horn and front turn signal lamps Application: All vehicles

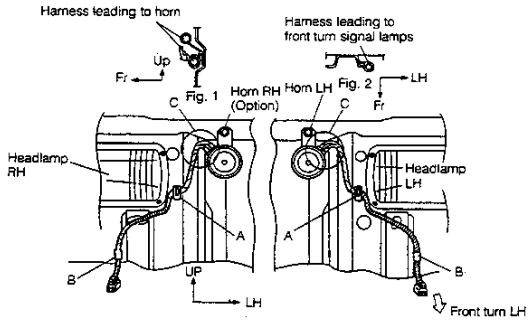

No.	Operation procedure	Section	Control item	Purposes
1.	Wind the metal sheet clamp at the radiator supporting surface on the harness leading to the horn and push the harness downward. (Fig.1)	A	Ensure that the harness is clamped securely and it runs along the radiator supporting surface.	To prevent the harness from interfering with the grille and headlamp grille
2.	Wind the metal sheet clamp at the support bracket side into the harness leading to the front turn signal lamp and clamp the harness securely. (Fig.2)	B	Ensure that the harness is clamped securely and it runs along the support bracket.	To prevent the harness from interfering with the body flange and balance panel
3.	Provide adequate space between the clamp (A) of the radiator support section and the terminal inserting section so that no sharp bending occurs at the terminal section.	C	Ensure that no sharp bending occurs at the terminal section.	To assure the performance

WFE90-HW050

Section: Harness leading to headlamp leveling controller
Application: Headlamp leveling-equipped vehicles

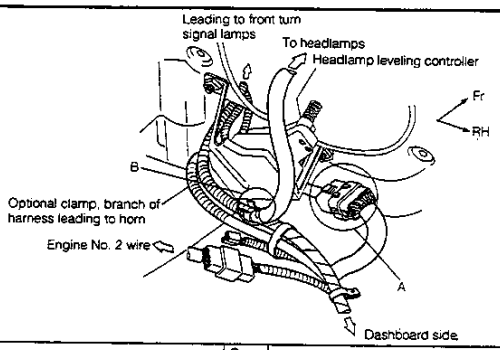

No.	Operation procedure	Section	Control item	Purposes
1.	The connection of the connector leading to the headlamp leveling controller (gray, waterproof, 8-pole) should be performed at the outside of the vehicle from the controller. (The figure above typically shows the right side. The figure for the left side is symmetrical with that for the right side.)	A	Ensure that the connector is positioned at outside of the headlamp leveling controller.	To prevent the controller bracket from interfering with the lead wire.
2.	Be careful not to allow the harness branch leading to the horn of the optional clamp (right side only) to be caught-in between the controller lower section and the apron.	B	Ensure that the branch is not caught-in between the controller and the apron.	To prevent damage or open wire owing to catch-in.

WFE90-HW051

Section: Apron (right side) Application: All vehicles

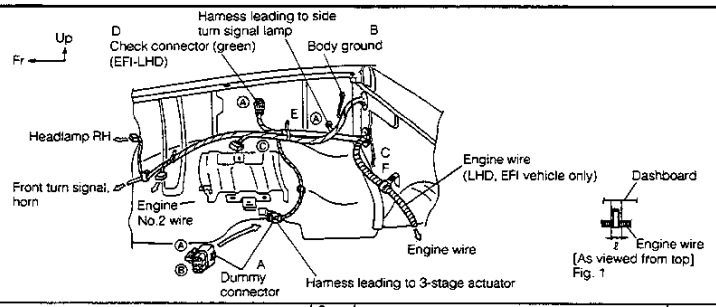

No.	Operation procedure	Section	Control item	Purposes
1.	Except for the 3-stage specifications, assemble the dummy connector and secure it to the apron bracket.	A	Ensure that the harness is clamped to the bracket securely.	To prevent abnormal noise and interference
2.	Tighten the body ground branch wire in such a way that it faces downward.	B	Ensure that the branch line faces downward.	For better appearance
3.	Secure the clamp to the dashboard bracket with the bolt.	C	Ensure that the harness is clamped securely at a point lower than the tightening point.	To prevent the harness from interfering with the brake tube, etc.
4.	Insert the check connector to the dashboard bracket, until the lock is engaged. EFI - 6-pole, green Rear-ABS 6- pole, gray	D	Ensure that the lock is made positively.	To prevent connector from being removed and interfered
5.	After completion of check connector wiring, clamp the harness with the apron cowl wire. (Use another band clamp for the U.S. specifications.)	E	Ensure that the harness is clamped securely to the apron side.	To assure route and to prevent interference
6.	When installing the clamp to the dashboard-side bracket, ensure that the clamp is not protruded from the clamp width (*l*). Never bend the clamp downward. (Fig. 1)	F	Ensure that the clamp is assembled within the bracket width.	To prevent the harness from interfering with the brake tube

WFE90-HW052

Section: Apron (left side) Application: All vehicles

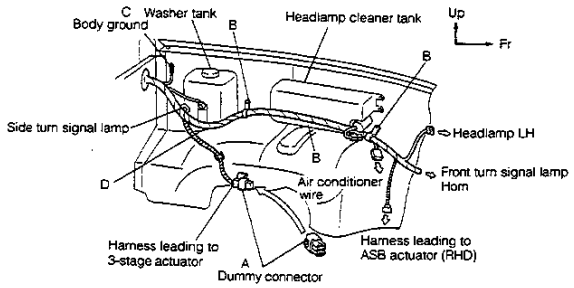

No.	Operation procedure	Section	Control item	Purposes
1.	Except for the 3-stage specifications, assemble the dummy connector and secure it to the apron bracket.	A	Ensure that the harness is clamped to the bracket securely.	To prevent abnormal noise and interference
2.	Clamp the apron securely.	B	Ensure that the clamping is made securely.	To prevent the harness from being caught-in under the washer tank and cleaner tank
3.	Tighten the body ground branch wire in such a way that it faces downward.	C	Ensure that the branch line faces downward.	For better appearance
4.	Route the harness located below the washer tank along the inside of the vehicle so that the harness may not be caught-in under the tank.	D	Ensure that the harness is not caught-in between the washer tank and the body.	To prevent the harness from being caught-in under the washer tank

WFE90-HW053

Section: Coil, resistor and engine wire Application: R.H.D. vehicles

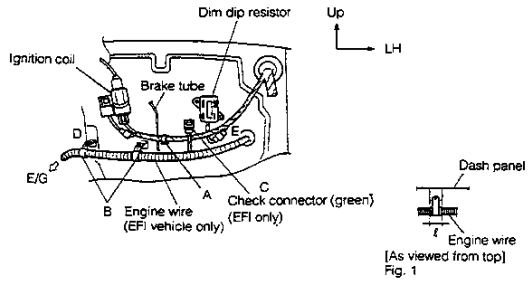

No.	Operation procedure	Section	Control item	Purposes
1.	Clamp the harness to the dashboard bracket section, working from the top.	A	Ensure that the clamp is secured positively.	To prevent harness from interfering with brake and air conditioner-related piping and engine wire attaching bolts
2.	Secure the clamp to the dashboard bracket with the bolt.	B	Ensure that the harness is clamped securely at a point lower than the tightening point.	To prevent the harness from interfering with the brake tube, etc.
3.	Working from the top, insert the check connector to the dashboard bracket, until the lock is engaged.	C	Ensure that the lock is made positively.	To prevent connector from being disconnected and interfered
4.	When installing the clamp to the dashboard-side bracket, ensure that the clamp is not protruded from the clamp width (ℓ). Never bend the clamp downward. (Fig. 1)	D	Ensure that the clamp is installed within the bracket width.	To prevent the harness from interfering with the brake tube To prevent interference with distributor and air-bleeding hose
5.	Place the connector (yellow, waterproof) with the dim dip resistor in front of the harness leading to the coil.	E	Ensure that the connector is positioned at front side of the harness leading to the coil.	To prevent the harness connector from interfering with the resistor

WFE90-HW054

Section: Cowl top Application: All carburetor-equipped vehicles

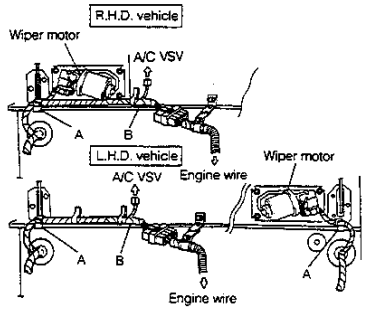

No.	Operation procedure	Section	Control item	Purposes
1.	Secure the harness rising to the cowl top just under the hinge center by means of a S-shaped clamp. (Clamp the clamp marking tape (yellow) section.)	A	Ensure that the harness is secured positively at the body flange "⌐⌐⌐"-shaped zone just below the hinge center.	To prevent the harness to interfere with the hinge. Ⓐ To prevent sag
2.	As for the harness leading to the air conditioner VSV, provide a branch point at inside of the band type clamp.	B	Ensure that the branch starts from the left side Ⓐ of the clamp.	To prevent the harness to sag
			Ensure that the connector and harness are not sagging, thus interfering the booster hose.	To prevent the harness to interfere with the booster hose

WFE90-HW055

Section: Back side of instrument panel Application: All vehicles

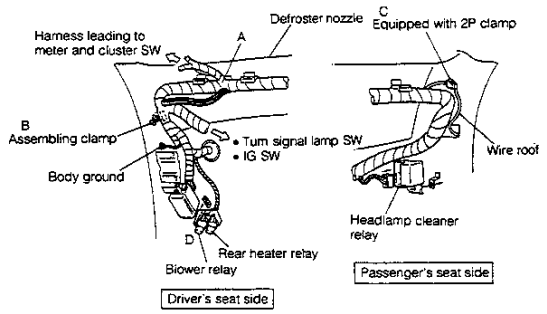

	Operation procedure	Section	Control item	Purposes
1.	Start the harness leading to the meter and cluster switch from the branch section of the defroster nozzle.	A	Ensure that the harness leading to meter and cluster switch are not caught-in under the trunk line.	To prevent the harness from pushing the nozzle
2.	Insert the harness assembling clamp at the bracket of the cowl side section.	B	Ensure that the clamp is secured positively.	To prevent the clamp from interfering with the pedal bracket
3.	After connecting the connector with the wire roof, secure the connector to the pillar clamp hole.	C	Ensure that the connector is securely positively.	To prevent abnormal noise
4.	Install the blower relay at the black marked side of the relay block. (All vehicles) 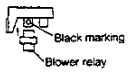	D	Ensure that the blower relay is inserted to the black marked side block.	To assure blower performance

WFE90-HW056

Section: Relays related to cowl side Application: All vehicles

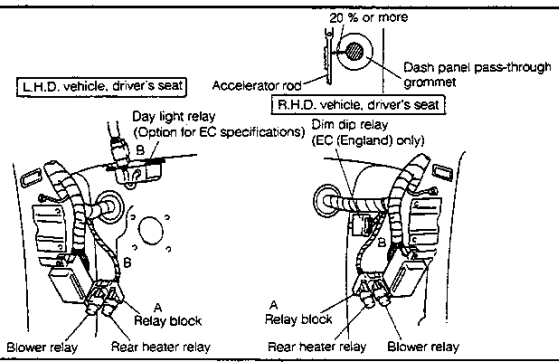

	Operation procedure	Section	Control item	Purposes
1.	Insert the relay block, until the protrusion at the inserting section is completely fitted with the hole at the bracket side.	A	Ensure that the relay block protrusion is fitted with the bracket completely.	To prevent the block from being removed
2.	When connecting each connector of the headlamp cleaner relay, day light relay and dim dip relay, fit the lock completely.	B	Ensure that the connector lock is fitted positively.	To assure performance
3.	For the R.H.D. vehicle, provide a gap of 20 mm or more between the accelerator rod and the harness that has passed through the dash panel.	C	Ensure that the gap is at least 20 mm.	To prevent the harness from interfering with the accelerator rod

WFE90-HW057

Section: Front door Application: Door wire-equipped vehicles

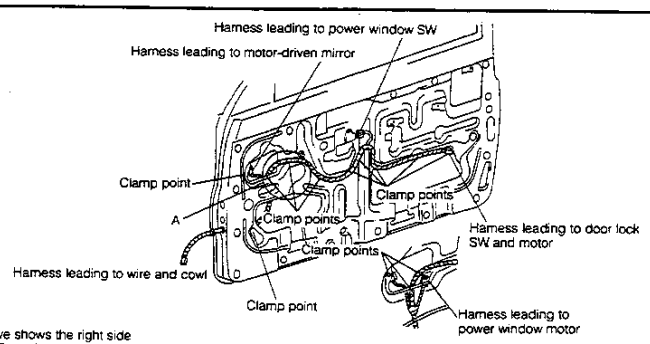

NOTE:
The figure above shows the right side door typically. The left side door is symmetrical with the right side door.

	Operation procedure	Section	Control item	Purposes
1.	Insert the harness clamp positively to the clamp hole.		Ensure that the clamp is secured positively.	• To prevent the trim from floating. • To prevent the clamp from interfering with the window glass

WFE90-HW058

Section: Harness leading to meter and cluster switch Application: All vehicles

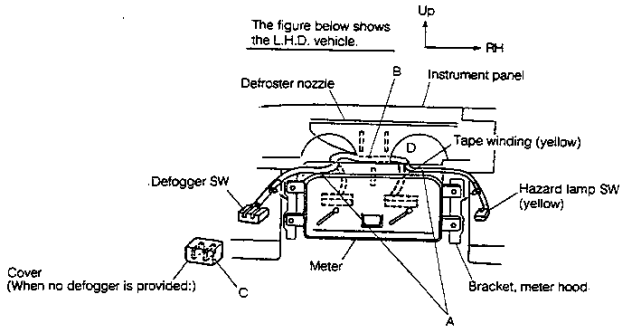

	Operation procedure	Section	Control item	Purposes
1.	Route the harnesses leading to the defogger switch and hazard lamp switch over the upper section of the meter.	A	Ensure that the harnesses do not sag down at the back side of the meter.	To prevent the harnesses from interfering with screws at the back of the meter
2.	When passing the harness through the meter opening at the back side of the instrument panel, pass it between the upper and lower ribs.	B	Ensure that the harness pass through the ribs.	To prevent the harness from being caught-in between the defroster nozzle and the instrument panel
3.	In the case of the specifications without defogger, secure the connector by inserting the rib at the back side of the switch cover into the groove at the connector.	C	Ensure that the connector is secured at the back of the cover.	To prevent abnormal noise
4.	Pass the hazard switch connector (yellow) and the yellow tape-wound harness leading to meter through the same opening. Pass other harnesses through the other opening.	D	R.H.D. – Hazard SW + 10P meter, Defogger SW + 12P meter L.H.D. – Hazard SW + 12P meter, Defogger SW + 10P meter Ensure that the harnesses run through in the following	To assure route To prevent the terminal from breaking at its neck

WFE90-HW059

Section: Harness leading to instrument panel switch Application: R.H.D. vehicles

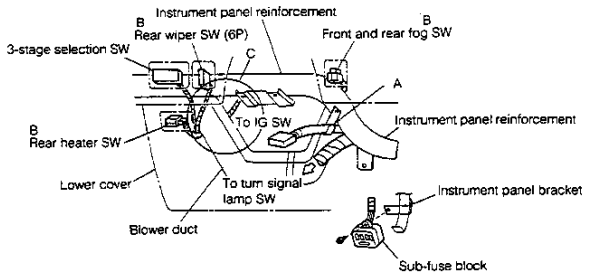

	Operation procedure	Section	Control item	Purposes
1.	Clamp the harness leading to the ignition switch by means of the metal sheet clamp of the instrument panel reinforcement.	A	Ensure that the clamp is secured positively.	To prevent the harness from interfering with the instrument panel, lower cover and duct.
2.	When any of the rear wiper, rear heater and fog lamp is not provided on the specifications, secure their switches by inserting the terminal section to the pin at the back side of the switch cover.	B	Ensure that the connector is secured positively.	To prevent the connector from interfering with the instrument panel and reinforcement
3.	Route the branch lines of the harnesses leading to the rear heater switch, 3-stage switch and rear wiper switch under the instrument panel reinforcement and duct.	C	Ensure that the branch line passes under the instrument panel reinforcement and duct.	To prevent abnormal noise To prevent the branch lines from interfering with the steering bracket and the bolt at tilt section

WFE90-HW060

Section: Harness leading to instrument panel switch Application: L.H.D. vehicles

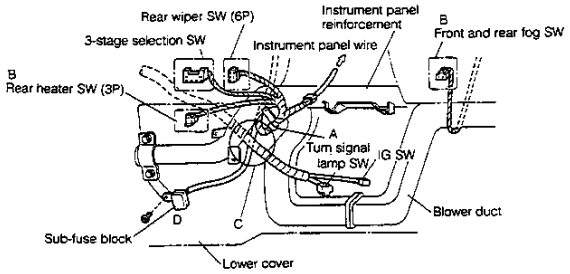

	Operation procedure	Section	Control item	Purposes
1.	Clamp the harnesses leading to the instrument panel wire, selection switch, rear wiper switch and rear heater switch by means of the metal sheet clamp of the instrument panel reinforcement.	A	Ensure that the clamp is secured positively.	To prevent the harness from interfering with the instrument panel, lower cover and duct.
2.	When any of the rear wiper, rear heater and fog lamp is not provided on the specifications, secure their switches by inserting the terminal section to the rib at the back side of the switch cover.	B	Ensure that the connector is secured positively.	To prevent abnormal noise To prevent the connector from interfering with the instrument panel, duct and reinforcement
3.	Route the harnesses leading to the turn signal lamp switch and ignition switch at the back side of the harness leading to the sub-fuse block and heater relay.	C	Ensure that the harnesses leading to the turn signal lamp switch and ignition switch pass at the back side of the harness leading to the sub-fuse block and heater relay.	To prevent abnormal noise
4.	Install the harness laterally in relation to the sub- fuse block installation.	D	Ensure that the harness is installed laterally in relation to the sub-fuse block installation.	To assure route To improve clutch pedal assembling operation

WFE90-HW061

Section: Harness leading to turn signal lamp switch Application: All vehicles

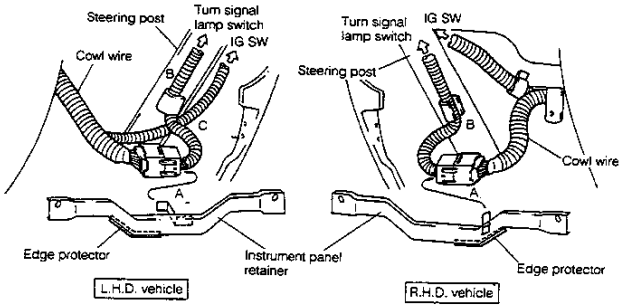

	Operation procedure	Section	Control item	Purposes
1.	After connecting the turn signal lamp switch connector, secure it to the bracket of the instrument panel retainer.	A	Ensure that the connector is secured to the bracket positively.	To prevent the connector from interfering with the retainer flange
2.	Positively clamp the lead wire at the turn signal lamp switch side by means of the steering post clamp.	B	Ensure that the clamp is secured positively.	To prevent the lead wire from interfering with the retainer flange
3.	Route the harness leading to the ignition switch in front of the turn signal lamp switch lead wire.	C	Ensure that the harness leading to the ignition switch is routed in front of the turn signal lamp switch wire.	To prevent the harness from interfering with the retainer flange

WFE90-HW062

Section: Related to right cowl side Application: All vehicles

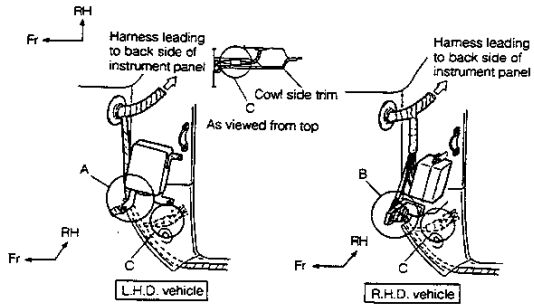

	Operation procedure	Section	Control item	Purposes
1.	L.H.D. vehicle: Route the branch line of the harness leading to the door between the dash panel attaching bracket of the EFI ECU and the dash panel.	A	Ensure that the branch lines of the harnesses leading to the door and leading to the ASB ECU are placed between the ECU bracket and the dash panel. Ensure that the harness is not caught-in by the attaching bolt and bracket.	To assure the route
2.	L.H.D. vehicle: When tightening the ECU attaching bracket, be careful not to allow the harness to be caught-in.			To assure the function
3.	R.H.D. vehicle: Ensure that the branch line of the harness leading to the door is not protruded from the edge surface of the relay block toward the interior side.	B	Ensure that the branch lines of the harnesses leading to the door and leading to the ASB ECU are placed at the inside of the edge surface of the relay block. Also, ensure that the branch lines run along the cowl side.	To prevent the harness from interfering with the accelerator pedal
4.	Place the connector connected with the door wire between the upper trim of the trim clip and the cowl side.	C	Ensure that the connector is placed between the upper trim of the trim clip and the cowl side.	To assure the route To prevent the trim from floating

WFE90-HW063

Section: Harness leading to cowl side floor Application: All vehicles

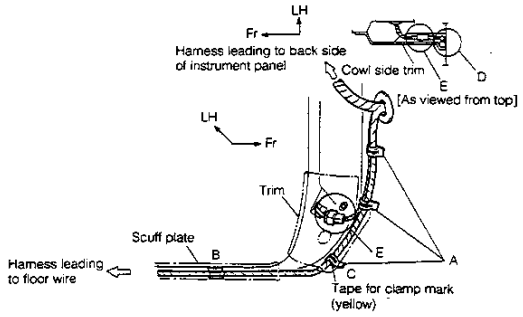

	Operation procedure	Section	Control item	Purposes
1.	When clamping with the metal sheet clamp at the dash panel section, ensure that the harness runs along the cowl side.	A	Ensure that the harness is clamped along the body.	To prevent the trim from floating
2.	Route the harness leading to the floor along the rocker panel and secure the harness with a gum tape.	B	Ensure that the harness leading to the floor is routed along the rocker panel.	To prevent the scuff plate from protruding toward the outside
3.	Clamp the harness at the tape section (yellow) for clamp mark.	C	Ensure that the harness is clamped securely at the position of the clamp mark.	To prevent the harness from meandering
4.	Route the branch line of the harness leading to the door wire along the trunk line of the harness leading to the wire floor. Clamp these lines together by means of the metal sheet clamp and store them inside the cowl side trim.	D	Ensure that the harness is clamped along the trunk line leading to the floor. Also, ensure that the line is stored inside the cowl side trim.	To assure the route To prevent the trim from floating
5.	Place the connector connected with the door wire on the upper side of the trim clip and between the trim and the cowl side.	E	Ensure that the connector is placed between the upper trim of the trim clip and the cowl side.	To assure the route To prevent the trim from floating

WFE90-HW054

Section: Related to console Application: Seat belt caution-equipped vehicles

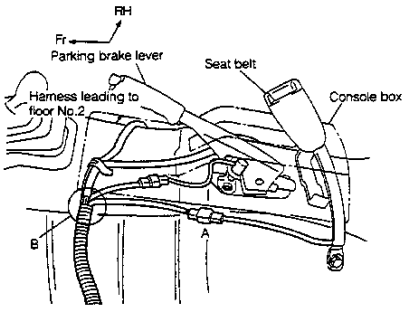

	Operation procedure	Section	Control item	Purposes
1.	Place the connector and route of the harness leading to the seat belt switch at the outside of the console box. Fr	A	Ensure that the connector and route of the harness leading to the seat belt switch are placed at outside of the console box.	To prevent the harness from being caught-in by the parking brake lever
2.	In cases where the branch starts from the front of the vehicle, provide branch points for the harnesses leading to the parking brake switch and leading to the seat belt switch at under the harness leading to the floor No.2 wire.	B	Ensure that the branch lines of the harnesses leading to the parking brake switch and leading to the seat belt switch are routed under the wire leading to the floor No.2.	To prevent the carpet from floating

WFE90-HW065

Section: Related to floor Application: All vehicles

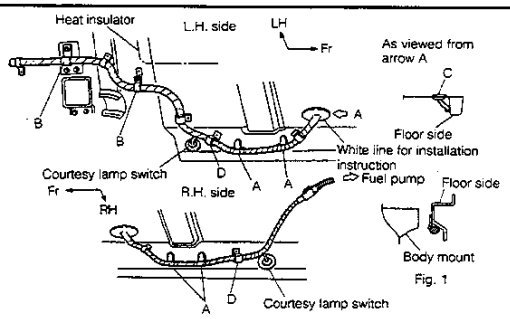

	Operation procedure	Section	Control item	Purposes
1.	Positively clamp the harness at the floor side with the harness assembling clamp so that the harness may not interfere with the body mount. (Fig. 1)	A	Ensure that the harness runs along the floor side surface. Also, ensure that the harness is routed at the lower surface of the floor side at the assembling clamp section.	To prevent the harness from interfering with the body mount
2.	Positively secure the screw retaining clamp at a point where the harness runs at outside of the vehicle.	B	Ensure that the harness is routed at the outside of the vehicle against the top of the screw.	Measures against heat damage from the muffler To prevent the harness from interfering with the heat insulator
3.	Set the floor pass-through grommet at the L.H. side of the vehicle in such a direction that the harness runs along the frame side. (As viewed from arrow A) (Install the grommet so that the white line for installation instruction may come at the front side of the vehicle.)	C	Ensure that the white line for installation instruction is parallel with the floor side and that it comes at the front side of the vehicle. Ⓐ	To prevent the harness from interfering with the body mount To prevent the metal sheet clamp from being detached Ⓐ
4.	Install the metal sheet clamp, wrapping the edge of the clamp.	D	Ensure that the edge of the clamp is wrapped.	To prevent the clamp from being detached and sagging

WFE90-HW066

Section: Related to back door Application: All vehicles

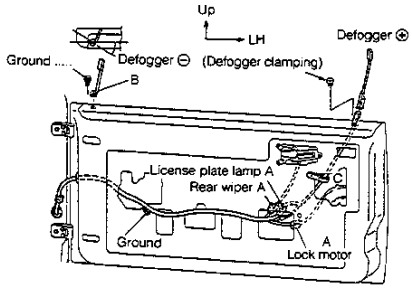

	Operation procedure	Section	Control item	Purposes
1.	Secure the connectors of the license plate lamp, rear wiper and lock motor to the back side of the instrument panel.	A	Ensure that the connectors are secured positively.	To prevent abnormal noise and interference
2.	Connect the defogger (–) line so that the staked section of the harness may tilt 45 degrees from the front/inside of the vehicle.	B	Ensure that the angle is within 45 degrees.	To prevent the harness from being caught-in between the rear window seal rubber and the body
3.	Secure the wire leading to the defogger with a band clamp.	C	Ensure that the harness is clamped securely.	To prevent the harness from interfering with the door lock parts

WFE90-HW067

Section: Harness leading to three-stage controller (L.H. wheel house) Application: Three-stage-equipped vehicles

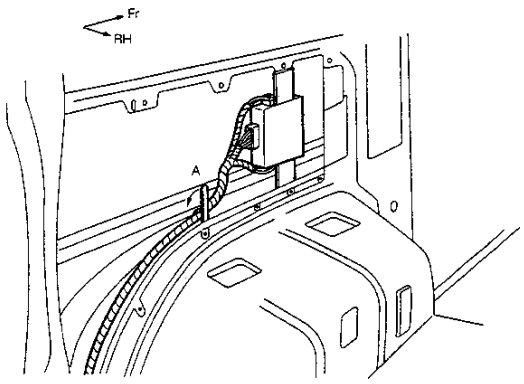

	Operation procedure	Section	Control item	Purposes
1.	Secure the harness leading to the three-stage controller with the metal sheet clamp.	A	Ensure that the harness is clamped securely.	To prevent the harness from rubbing and emitting abnormal noise To prevent the terminal from being broken at its neck section